INTRODUCTION

This product manual contains the information needed for the setup, installation, initial start up, sanitation and maintenance of this ice machine. Keep it for future reference.

Be certain that the information applies to the model in question. If no model is listed, the information applies to all models.

This manual is organized in the same way as the expected use of the machine, it begins with specifications, goes thru unpacking and setup, shows where everything is; continues with initial start up, then describes how it works. After that is the sanitation section, followed by service diagnosis and repair.

CM Cubed™ Cuber Performance Raised to a Higher Power.™

TABLE OF CONTENTS

Specifications · · · · · · · · · · · · · PAGE 2

Air Cooled Layout · · · · · · · · · · · PAGE 3

Water Cooled Layout · · · · · · · · · PAGE 4

Pre-Installation · · · · · · · · · · · · · PAGE 5

Location · · · · · · · · · · · · · · · · PAGE 6

On a Bin · · · · · · · · · · · · · · · · PAGE 7

On a Beverage Dispenser · · · · · · · PAGE 8

On a Motel Dispenser · · · · · · · · · PAGE 9

Cabinet Panel Removal: · · · · · · · · PAGE 10

Bin Thermostat: Optional Installation · PAGE 11

Plumbing - Air Cooled · · · · · · · · · PAGE 12

Plumbing - Water Cooled · · · · · · · PAGE 13

Electrical · · · · · · · · · · · · · · · · PAGE 14

After Utility Connections · · · · · · · · PAGE 15

Component Description and Function · PAGE 16

AutoIQ Controller · · · · · · · · · · · PAGE 17

How To Operate The AutoIQ Controller PAGE 18

Initial Start Up · · · · · · · · · · · · · PAGE 19

Adjustments · · · · · · · · · · · · · · PAGE 20

How This Machine Works · · · · · · · PAGE 21

How This Machine Works · · · · · · · PAGE 22

Technicians Only: Freeze Cycle Operational Sequence · · · · · · · · · · · · · · · · PAGE 23

Technicians Only: Harvest Cycle Operational Sequence · · · · · · · · · · · · · · · · PAGE 24

Sanitation and Cleaning · · · · · · · · PAGE 25

Additional Maintenance · · · · · · · · PAGE 26

Additional Maintenance: Ice Sensors · PAGE 27

Additional Maintenance: Air Filter Replacement · PAGE 29

Additional Maintenance: Condenser · · PAGE 30

Service Diagnosis: Controller Diagnostic Light Analysis · · · · · · · · · · · · · · · · PAGE 31

Service Diagnosis · · · · · · · · · · · PAGE 32

Service Diagnosis: Components · · · · PAGE 33

Service Diagnosis: PTCR · · · · · · · PAGE 34

Operational Characteristics: **CME306** · PAGE 35

Operational Characteristics: **CME456** · PAGE 36

Removal and Replacement: Water Level Sensor · PAGE 37

Removal and Replacement: Fan Blade and/or Fan Motor · · · · · · · · · · · · · · · · · PAGE 38

Refrigeration · · · · · · · · · · · · · · PAGE 39

Before Calling for Service · · · · · · · PAGE 40

Parts Lists and Wiring Diagrams are Located in the Center of this Manual

Specifications

This ice machine is designed to be installed indoors, in a controlled environment. It will operate satisfactorily under a wide variety of conditions. Do NOT operate the machine in temperatures it has not been designed for. Do NOT operate the machine above or below the voltage limits for the particular model. Do NOT operate the machine with too little or too much water pressure.

Operational Limits

	Minimum	Maximum
Air Temperature	50°F.	100°F.
Water Temperature	40°F.	100°F.
Water Pressure	20 psi	80 psi
Voltage (115 volt models)	104	126
Voltage (208-230 v models)	198	253
Voltage (50 Hz models)	207	253

Inlet water flow required is 1.25 GPM.

All models will fit a standard, 22" wide Scotsman Ice Storage Bin such as the BH360.

Note: Slope front bins may need an internal baffle. Scotsman's BH360 has the required baffle. Baffle must be approximately in the position shown in the diagram on page 5.

Note: The ice machine will hang over the back of the Lancer dispensers shown in the following list.

In addition, there may be other bins that can be used, check Scotsman's sales literature for application information.

Note: This unit may not be stacked.

Bin and Dispenser Applications & Kits:

- BH360 bin: Direct Fit
- HD22 dispenser: Direct Fit.
- ID150, add adapter kit KBT42
- ID200 or 250, add adapter kit KBT43
- Lancer 22" wide model: Add kit A37693-021.
- Lancer 30" wide model: Add kit KLD22-30.
- HTB555 - Add bin top kit KBT27
- Bin's with short/no baffle require thermostat kit: KSTAT-22.

Scotsman reserves the right to make design changes and/or improvements at any time. Specifications and designs are subject to change without notice.

Scotsman assumes no liability or responsibility of any kind for products manufactured by Scotsman that have been altered in any way, including the use of any parts and/or other components not specifically approved by Scotsman.

Basic Information

Model Number	Series	Dimensions W" x D" x H" (w/o bin)	Basic Electrical	Condenser Type	Minimum Circuit Ampacity	Max Fuse* Size	Refrigerant Charge (R-404A)
CME306AS-1	A, B or C	22 x 24 x 28	115/60/1	Air Cooled	16	20	23 ounces
CME306AS-32	A, B or C	same	208-230/60/1	Air Cooled	7.9	15	23 ounces
CME306AS-6	A, B or C	same	230/50/1	Air Cooled	15	15	23 ounces
CME306WS-1	A	same	115/60/1	Water Cooled	16	20	15 ounces
CME306WS-32	B or C	same	208-230/60/1	Water Cooled	7.4	15	13 ounces
CME306WS-6	A	same	230/50/1	Water Cooled	15	15	15 ounces
CME306WS-1	B or C	same	115-60/1	Water Cooled	16	20	13 ounces
CME306WS-1	B or C	same	230/50/1	Water Cooled	15	15	13 ounces
CME456AS-1	A, B or C	same	115/60/1	Air Cooled	19	20	24 ounces
CME456AS-32	A, B or C	same	208-230/60/1	Air Cooled	9.8	15	24 ounces
CME456WS-1	A	same	115/60/1	Water Cooled	19	20	17 ounces
CME456WS-1	B or C	same	115/60/1	Water Cooled	19	20	14 ounces
CME456WS-32	B or C	same	208-230/60/1	Water Cooled	9.2	15	14 ounces
CME456AS-6	A, B or C	same	230/50/1	Air Cooled	7.9	15	24 ounces
CME456WS-6	A	same	230/50/1	Water Cooled	7.1	15	17 ounces
CME456WS-6	B or C	same	230/50/1	Water Cooled	7.1	15	14 ounces

* Or HACR circuit breakers.

Air Cooled Layout

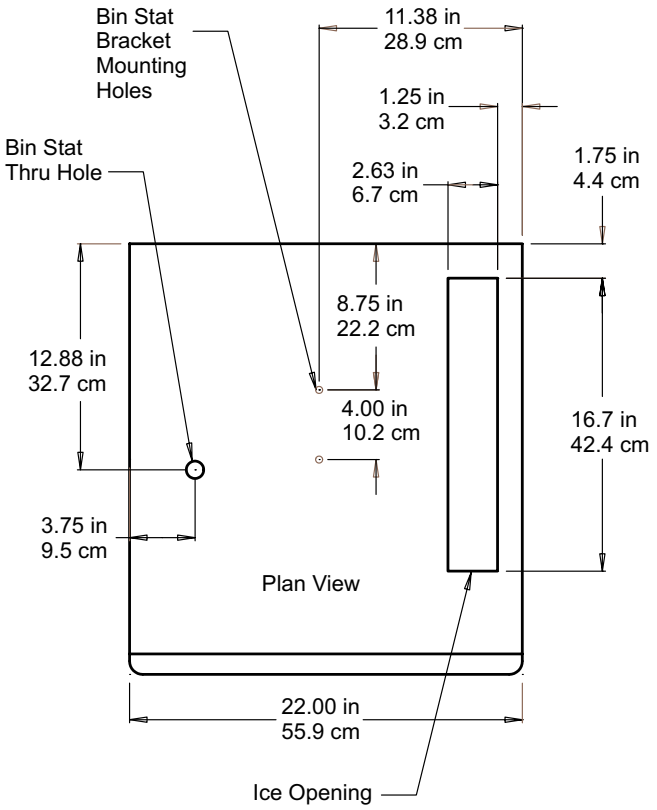

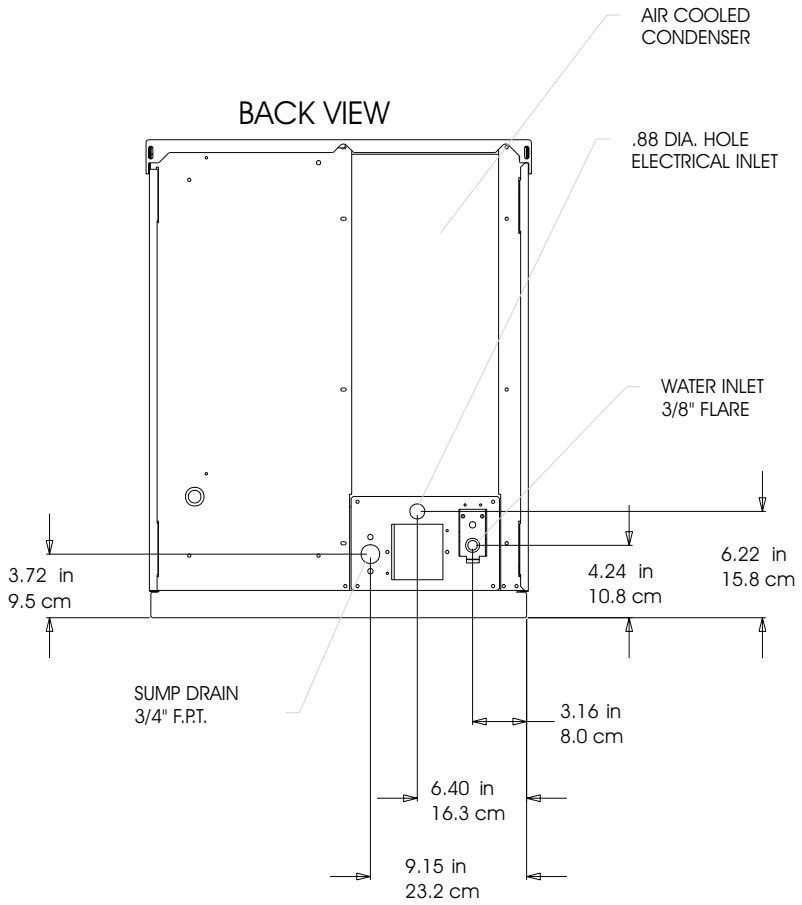

CME306 & CME456

Water Cooled Layout

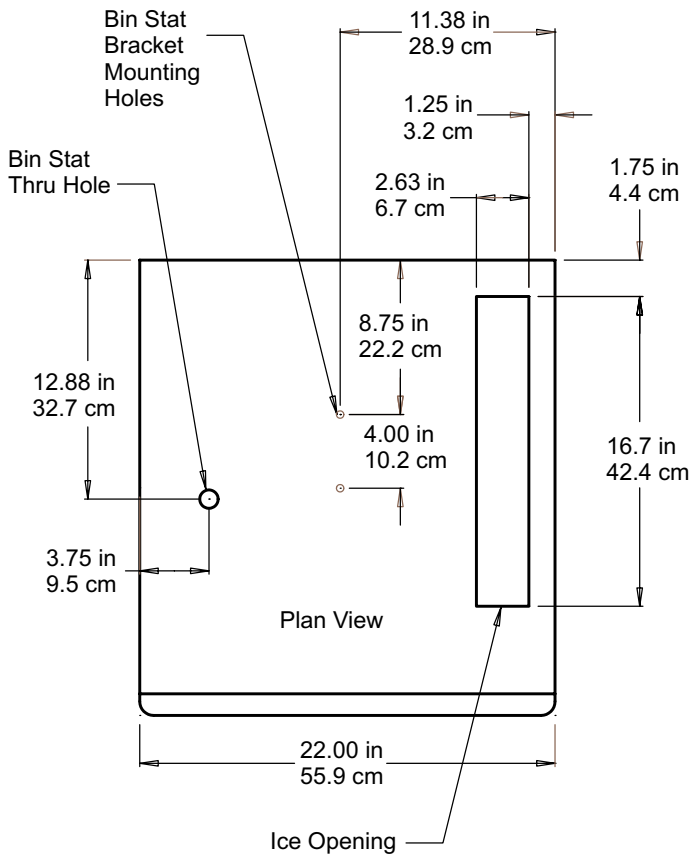

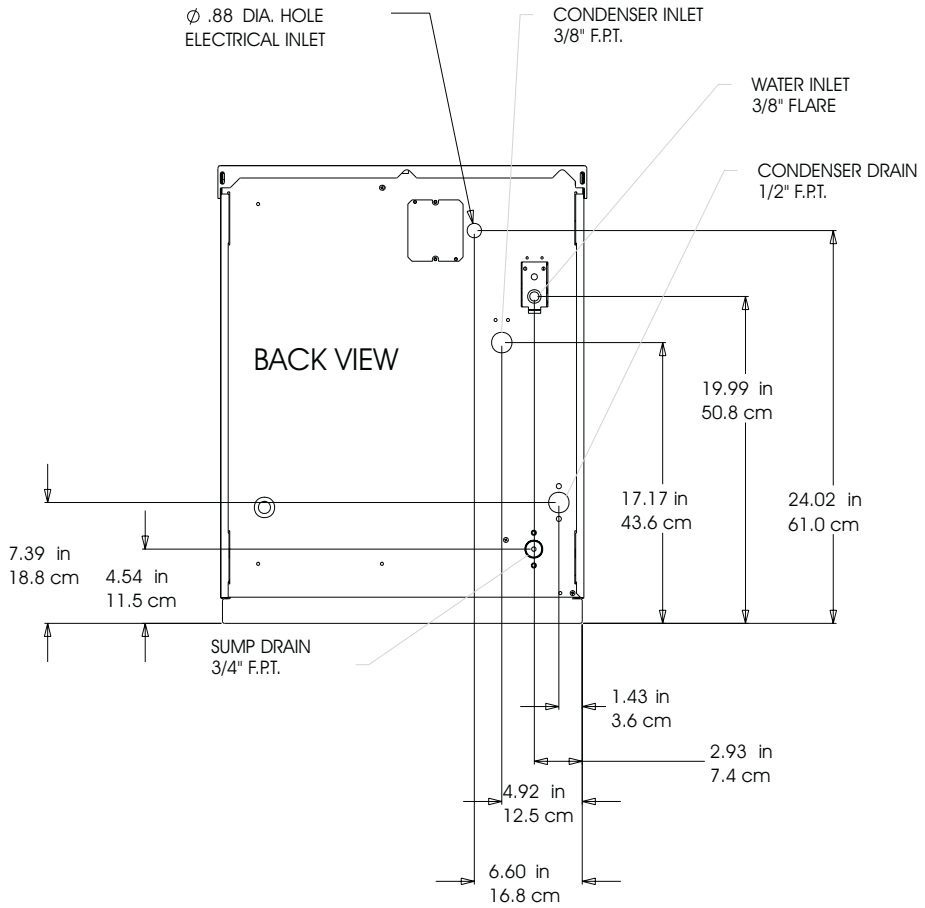

Pre-Installation

Other Applications:

Check Scotsman sales information for recommendations regarding applications.

Do not place Air Cooled models where the noise from the fan(s) will be objectionable.

Check the nameplate for electrical requirements. The nameplate is located on the back of the ice machine. While the model and serial number are on the nameplate, a **serial number plate** is located at the front of the machine, near the controller.

Water:

There is no such thing as pure water. All water contains some impurities. There are two ways water carries the impurities: suspended and dissolved. Suspended solids can be filtered out. Dissolved solids must be diluted or treated. Water filters are recommended to remove suspended solids. Some filters also have treatment in them for dissolved solids. Check with a water treatment service for a recommendation.

Cube Ice machines use more water than what ends up in the bin as ice. While most water is used during ice making, a portion is designed to “rinse" out the water system to keep hard water scale from clogging up the machine. That water rinse, combined with water filters, prolongs the times between needed water system cleaning.

Note: All Scotsman CM^3 models, like those described in this manual, feature Scotsman’s AutoIQ™ control system and ReliaClean™ water system cleaning process.

Service Technicians: All models covered here come set from the factory at a “standard” water rinse, which is compatible with typical water conditions. They may be adjusted to “Minimum" or “Maximum" water rinse after start up. If the prior ice machine worked acceptably well with the local water conditions, leave the machine at the factory setting. If severe water conditions are present, and water filters do not solve the problem acceptably, adjust the machine to use more water. If water conditions are excellent, adjust the machine to use less water. See the Adjustments section.

Note: Water use adjustments are customer convenience adjustments; they are NOT factory defects and are NOT covered by warranty.

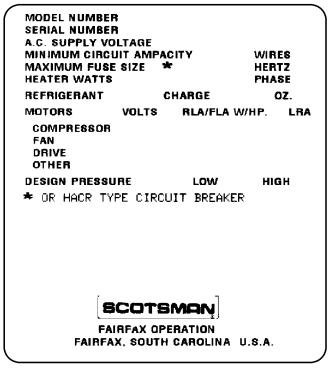

Nameplate on Back Panel

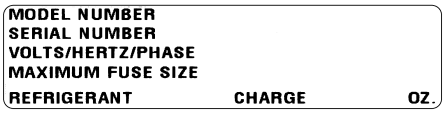

Serial Number Plate, Remove Front Panel to Locate

Note: Slope front bins must have an internal baffle. Scotsman’s BH375 has the required baffle. Baffle must be approximately in the position shown in the diagram.

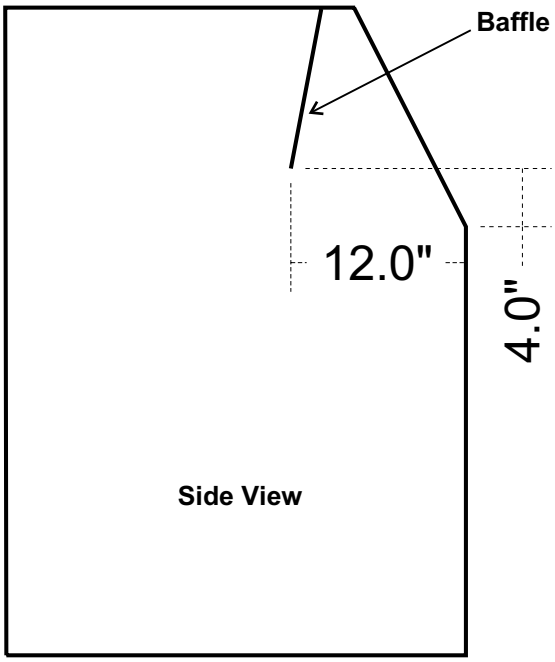

Location

Air cooled models take room temperature air in from the left side and discharge warm air out the back. Do not place them where the heat and noise will be objectionable.

A 6 inch **MINIMUM** clearance between the back and a wall and between the left side and a wall or another product is required for the basic operation and service of the air cooled model.

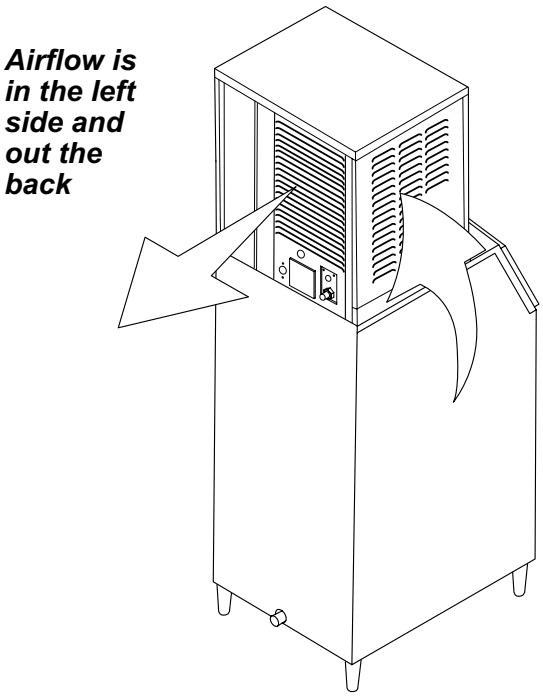

Note: A six inch side clearance with zero top clearance will NOT provide enough air exchange space for optimum performance. 12 inches side clearance is required when there is no top clearance.

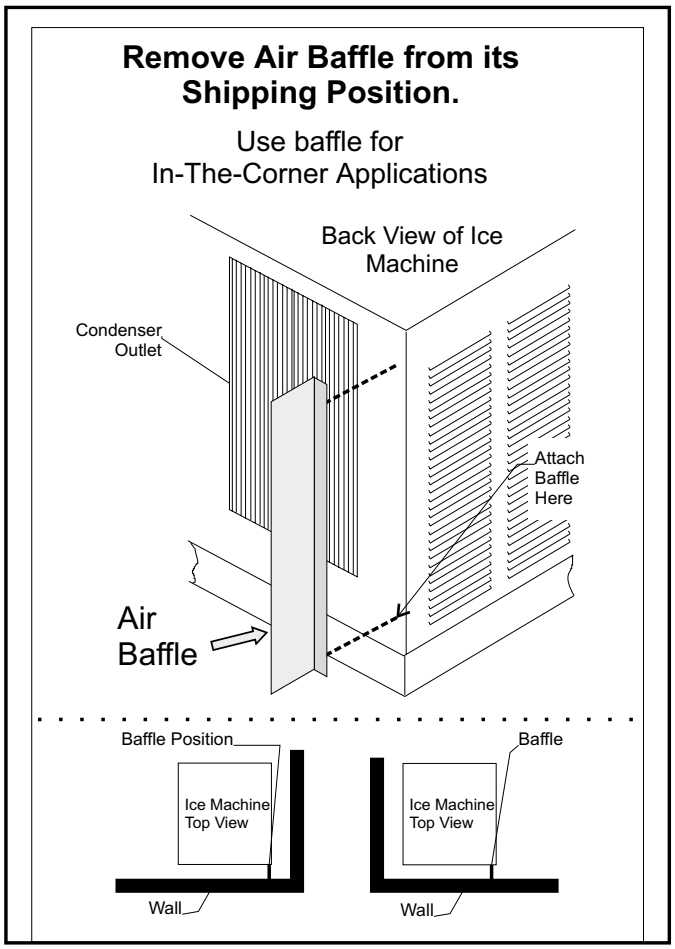

Air cooled models come equipped with a baffle that can be used when the machine is installed in a corner.

The purpose of the baffle is to limit air recirculation. This can occur in a corner when the hot air from the back of the machine is re-drawn back into the machine from the nearest side of the machine.

Install the air baffle as shown on the left rear corner when a side wall and back wall are between 6 and 18 inches from the unit.

On a Bin

Unpacking and Assembly:

Begin with unpacking the ice storage bin. Remove the carton, and using part of the carton as a cushion, tip the bin on its back to remove the skid and attach the legs or casters.

Return the bin to an upright position. Check the bin top gasket for gaps and tears, fill any in with food grade sealant prior to placing the ice machine on the bin.

Level the top edge of the bin front to back and left to right.

If the ice machine has not been unpacked, do so now. Remove the carton from the skid. After removal of the shipping straps, lift the ice machine off the skid directly onto the bin.

Note: The machine is heavy! Use a mechanical hoist if necessary.

Secure the ice machine to the bin with the hardware provided (two metal straps and 4 bolts).

Application Notes:

No thermostat is required for any of the following bins.

BH375: Direct fit. Connect ice machine to bin using strap and bolts from ice machine for the ice machine side, and sheet metal screws to attach the bracket to the bin. Use the bracket as a template and drill two holes in the back of the bin for the sheet metal screws.

HTB555: Use KBT27

BH550: Use KBT27 and Kbaffle1

Other Brand's Bins: KBT27 may allow installation of this unit on a non-Scotsman 30" wide bin. Thermostat kit KSTAT-22 must be used if the bin's baffle is too short.

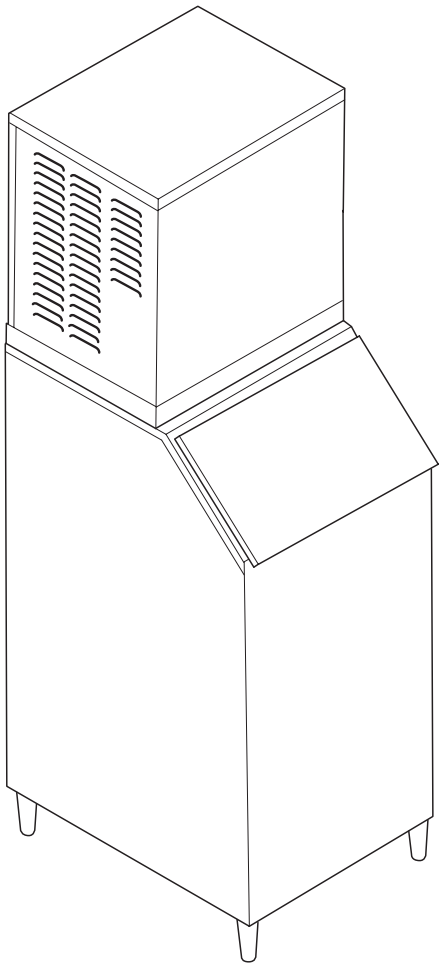

On a Beverage Dispenser

The CME306 or CME456 will mount on top of many brands of ice and beverage dispensers. The brands include Scotsman, Cornelius and Lancer.

Scotsman and Cornelius use the same adapter kits. 22” wide ice dispensers use KBT42, while 30” wide units use kits KBT43.

A bracket kit (A37693-021) is required to connect and secure the CME306 or CME456 to the Lancer 22” wide ice or ice and beverage dispenser.

No thermostat is required in any of the above.

A bracket and filler plate kit (KLD22-30) is required to connect and secure the CME306 or CME456 to the Lancer 30” wide ice or ice and beverage dispenser. It includes a thermostat and bracket.

Other dispensers may require their own adapter kits. Contact Scotsman or a Scotsman Distributor for additional information.

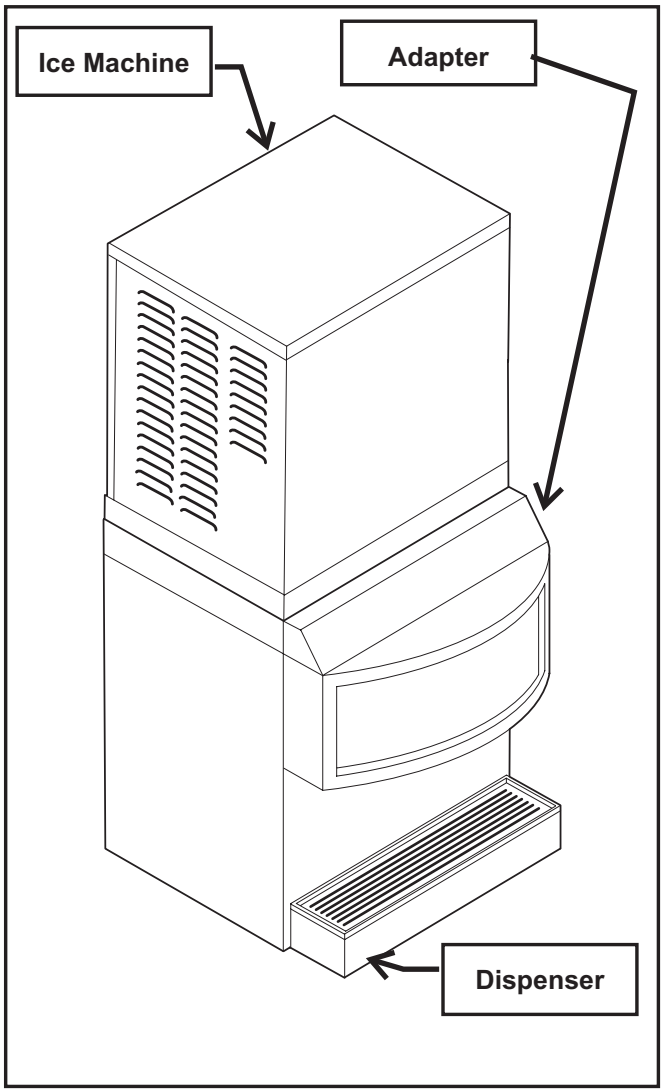

On Scotsman Dispenser

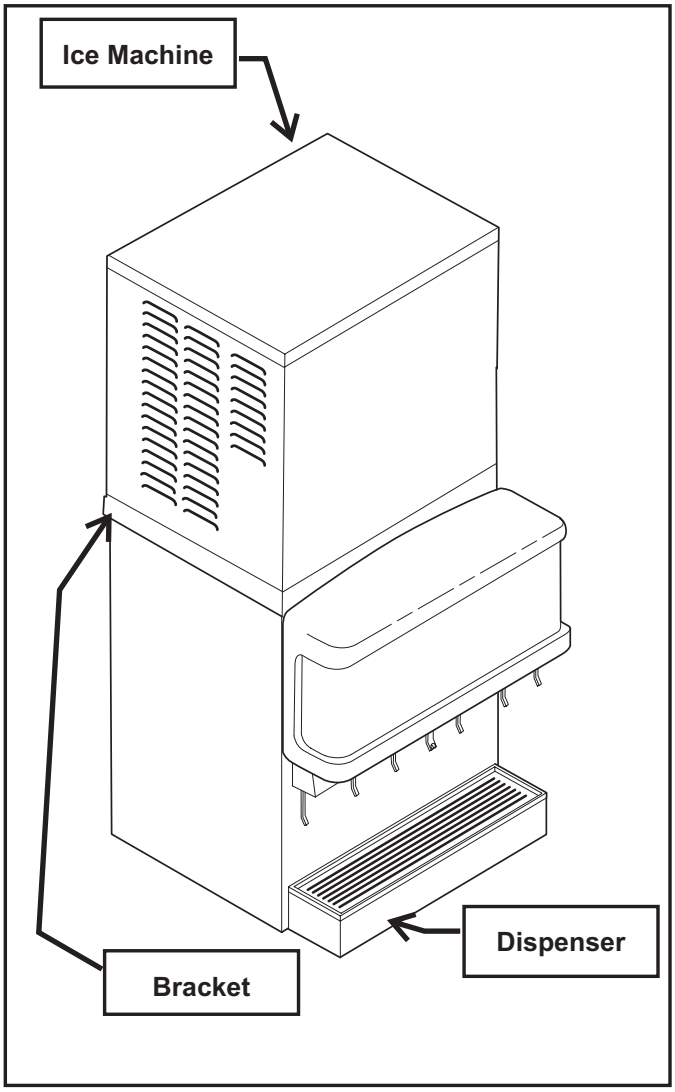

On a Lancer Dispenser

On a Motel Dispenser

Either the CME306 or the CME456 may be placed on a Motel Dispenser.

No thermostat is required when used on either the SLD150 or the HD150, or HD156 or HD22.

Scotsman model SLD150 may be used, but the back portion of the top must be removed and replaced with the KDT22 kit.

The Scotsman HD22 is a direct fit.

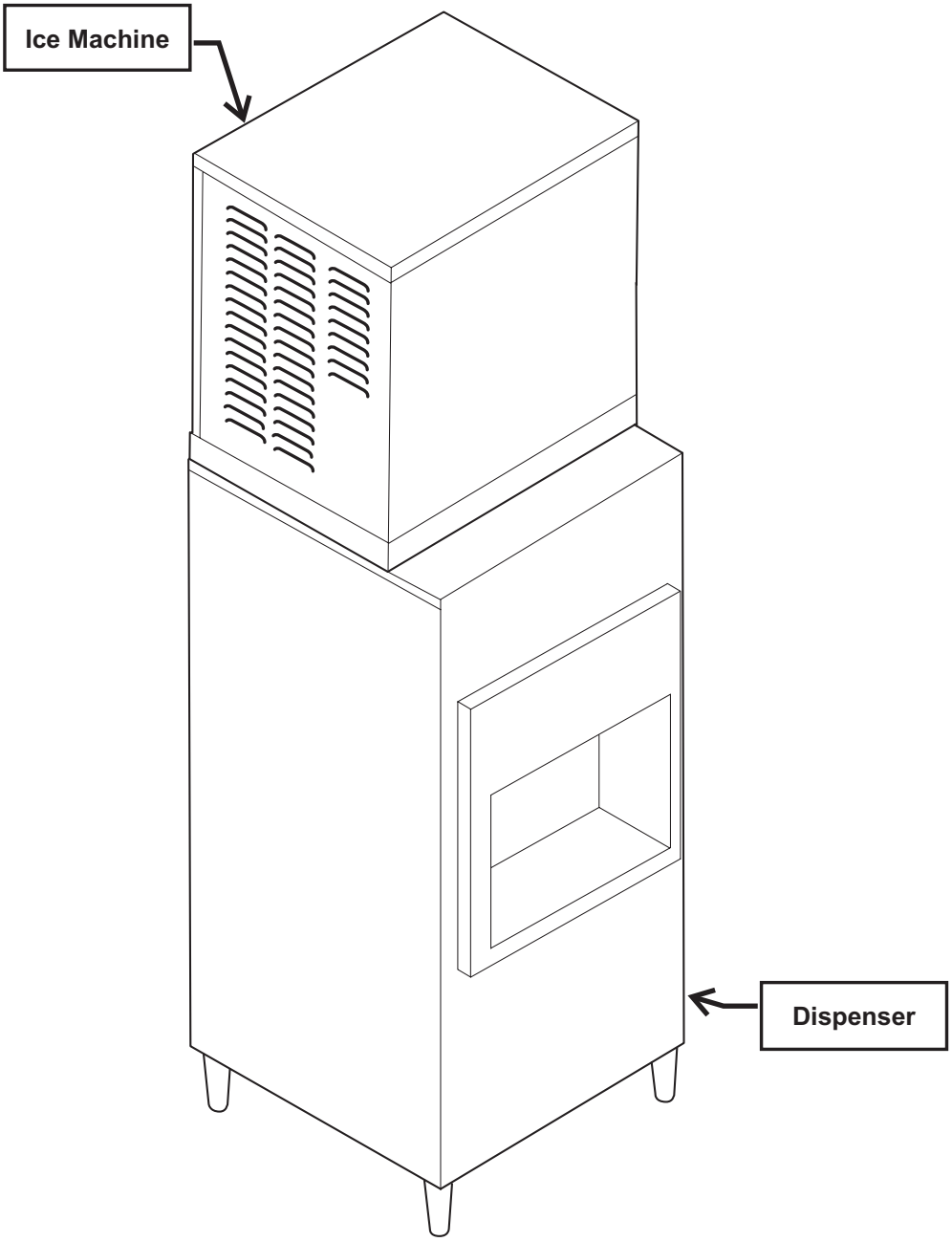

Cabinet Panel Removal:

Note: The top panel holds the upper edges of the side panels in place.

1. Remove the front panel by removing the two screws connecting the top edge of the front panel to the machine, then pull out at the bottom.

2. Lift up at the front edge and push the top panel back until it releases from the tabs connecting it to the side panels.

3. Remove the screws at the front edge of the left side panel, and push it back until it releases from the tabs connecting it to the back panel.

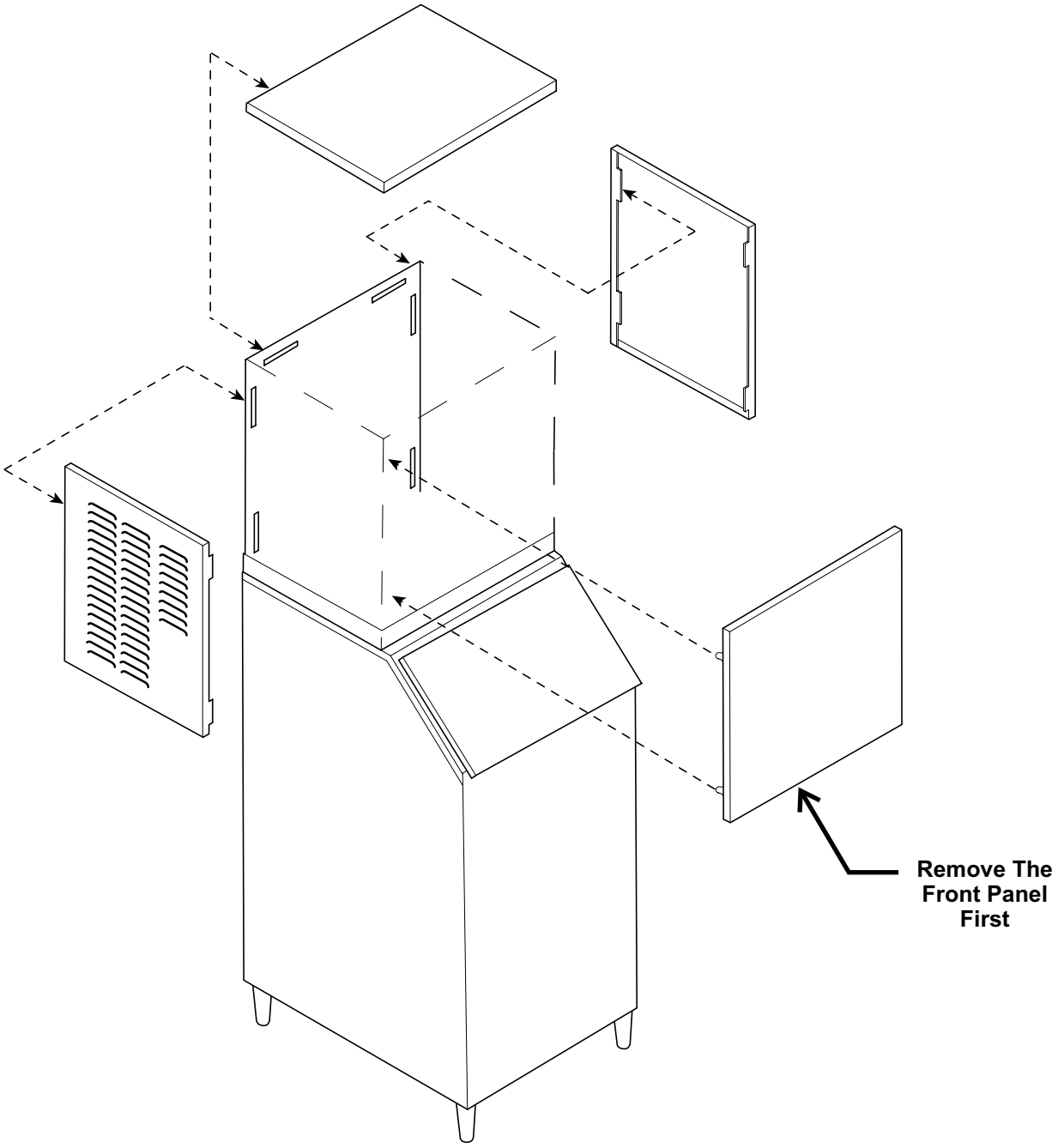

Bin Thermostat: Optional Installation

The normal bin control is the ice sensor set. An option, required in some cases, is a thermostat. Its bulb **must** be deployed **after** the ice machine has been placed on the bin or dispenser.

Note: Some configurations may have parts that vary from these instructions. Follow the instructions for the particular configuration.

Before starting, remove the left side panel and any baffle in the bin.

1. Place thermostat in machine behind the high voltage box and secure to the existing holes with two screws. Locate bin thermostat bulb.

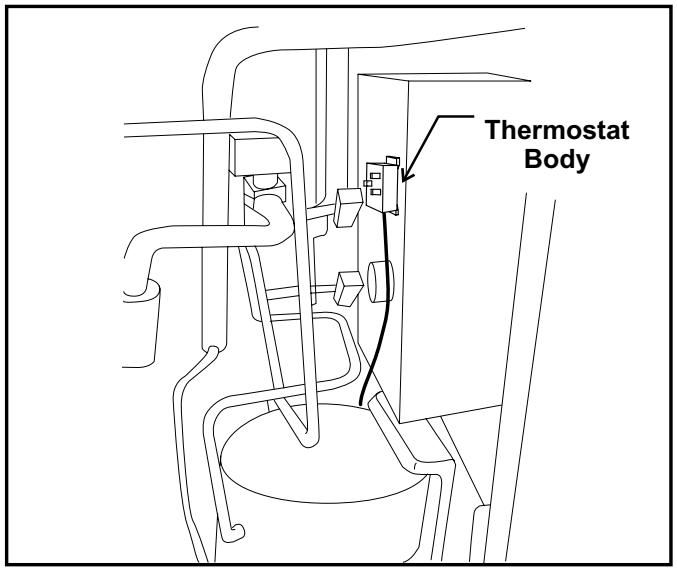

2. Route bulb thru routing hole (located behind the compressor).

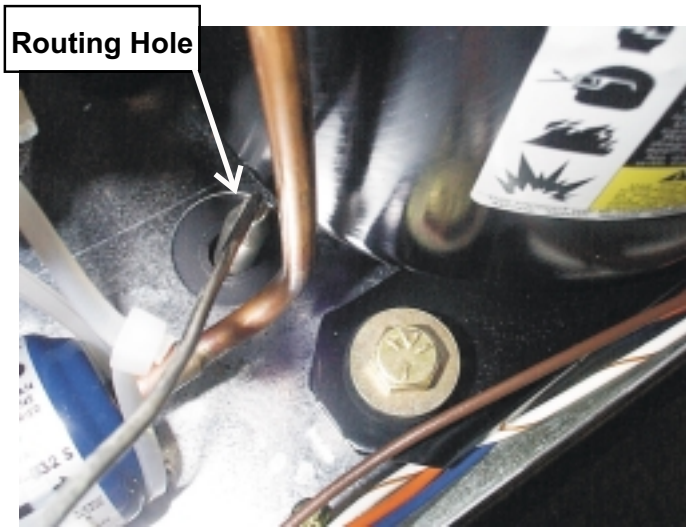

3. Locate bin thermostat bracket.

4. Carefully position the thermostat bulb on the bracket.

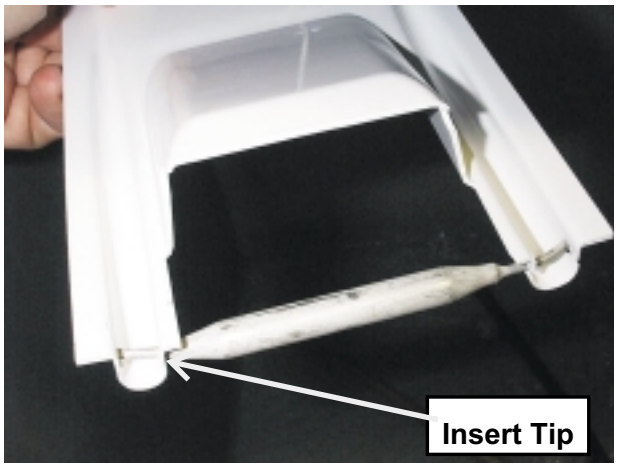

5. Fasten the bracket to the bottom of the ice machine with the two 3-pronged knobs supplied with the kit.

6. Pull excess capillary tubing into the machine..

7. Continue with the installation. If a baffle was removed return it to its original position.

Note: If the machine is located at an altitude higher than 2,000 ft., adjust the thermostat by removing the plastic cover and rotating the adjustment screw per the table.

Bin Thermostat Altitude Correction Table			
CW Turns of Range Screw (under plastic cover)			
Feet	Turns	Feet	Turns
2000	55°	8000	340°
4000	160°	9000	385°

Use This Table to Adjust Thermostat

Plumbing - Air Cooled

All models require an adequate potable water supply and a gravity drain. The recommendations for tubing are:

- Water supply to be ⅜" OD.
- Drain to be ¾" OD.

Note: When replacing a prior ice machine, do not take a short cut and reuse the old inlet and drain system. INSTALL A NEW SYSTEM.

Supply:

Air cooled models have 1 water supply connection, a ⅜" male flare at the back of the cabinet.

Exception: WRAS listed units have a 3/4" GAS or BSPP water inlet fitting size.

Connect to cold potable water that has adequate pressure.

Note: Using water supply tubing smaller than ⅜" will cause severe operational issues.

Water Filters:

The water filters must flow at least **1.25 GPM** or they will cause severe operational issues. Check with the filter manufacturer. When replacing a prior ice machine, do NOT assume that the water flow capacity of the filter will be adequate.

All Drain Tubing Material must be RIGID. Flexible tubing will eventually cause a restricted drain.

Drain:

Air cooled models have 1 gravity drain connection, a ¾" FPT fitting at the back of the cabinet. Use only RIGID TUBING. Flexible tubing may be easily kinked or become cracked.

The drain tube must be vented at the back of the cabinet. Use an 18" high vent.

The ice storage bin will have a drain out the back or base, depending upon the model.

The drain for the ice machine and the ice storage bin must be SEPARATE or the ice machine's drain water may run into the bin and MELT THE ICE.

Insulation is recommended for the ice machine reservoir and bin drains.

Follow all applicable codes

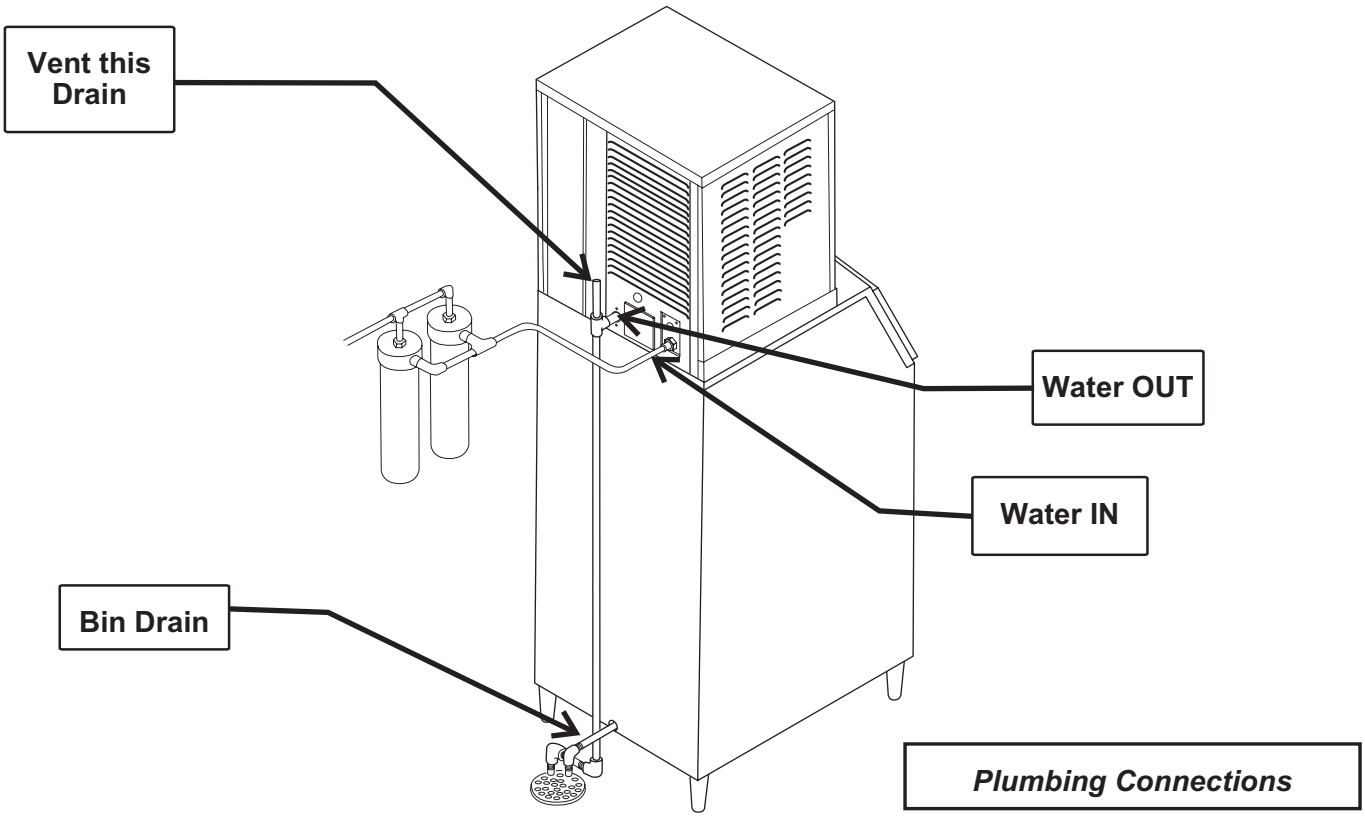

Plumbing Connections

Plumbing - Water Cooled

All models require an adequate potable water supply and a gravity drain. The recommendations for tubing are:

- Water supply to be ⅜" OD.
- Drain to be ¾" OD.

Note: When replacing a prior ice machine, do not take a short cut and reuse the old inlet and drain system. INSTALL A NEW SYSTEM.

Supply:

Water cooled models have TWO water supply connections, a ⅜" male flare for POTABLE water AND an additional ⅜" FPT condenser inlet connection, both at the back of the cabinet.

Connect both to cold water w/adequate pressure.

Note: Using water supply tubing smaller than ⅜" will cause severe operational issues.

Water Filters:

The water filters must flow at least 1.25 GPM to the potable water inlet or they will cause severe operational issues. Check with the filter manufacturer.

When replacing a prior ice machine, do NOT assume that the water flow capacity of the filter will be adequate. Connect the water cooled condenser inlet to the water supply ahead of the water filters.

All Drain Tubing Material must be RIGID. Flexible tubing will eventually cause a restricted drain.

Drain:

Water cooled models have TWO gravity drain connections, a ¾" FPT fitting AND a ½ " FPT fitting. Use only RIGID TUBING. Flexible tubing may be easily kinked or become cracked.

The reservoir drain must be vented at the back of the cabinet. Use an 18" high vent. Do NOT vent the condenser drain.

The ice storage bin will have a drain out the back or base, depending upon the model.

The drain for the ice machine and the ice storage bin must be SEPARATE or the ice machine's drain water may run into the bin and MELT THE ICE.

Insulation is recommended for the ice machine reservoir and bin drains.

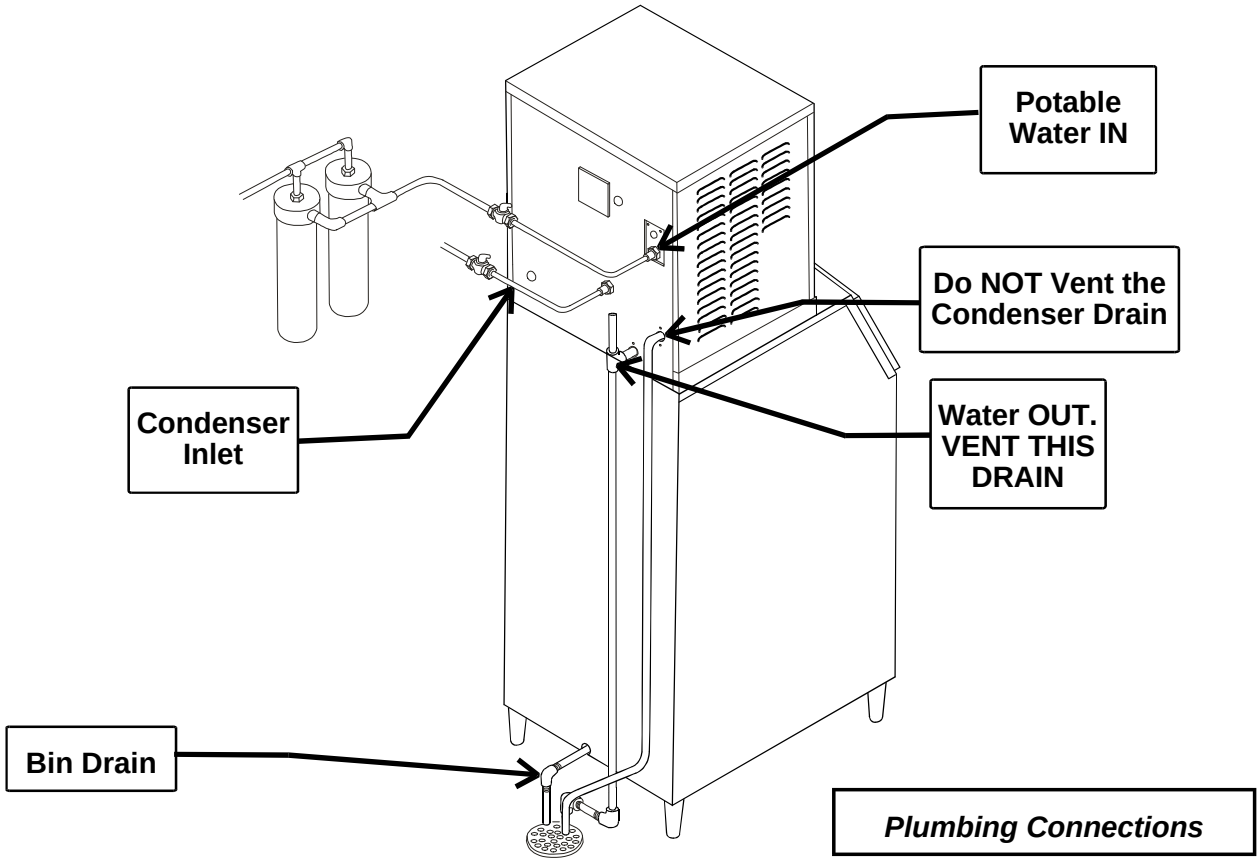

Plumbing Connections

Electrical

All models must be installed with the correct wire size and type per the National Electric Code. Locate the nameplate on the back of the cabinet and find the numbers for Voltage, Phase, Minimum Circuit Ampacity and Maximum Fuse Size. Either fuses or HACR type circuit breakers may be used.

Electrical connections are made in the junction box in the back of the cabinet.

1. Remove the junction box cover.
2. Knock out 1 hole for a field supplied strain relief.
3. Install wires and strain relief per code.
4. Connect to wires and secure ground wire to ground screw inside the junction box.

Follow all Local, State and National codes.

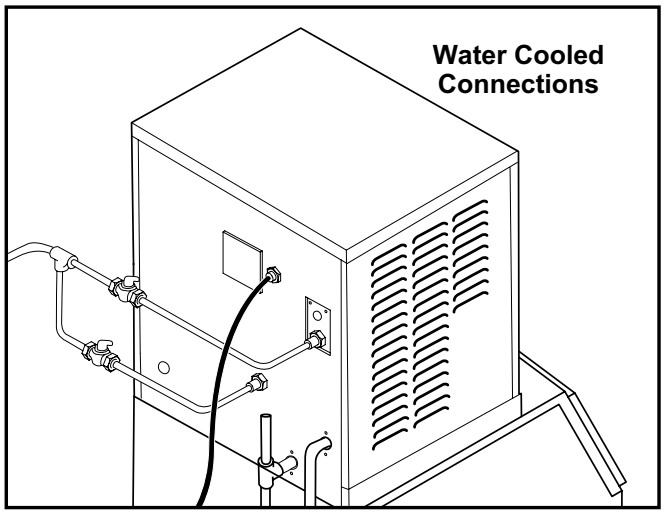

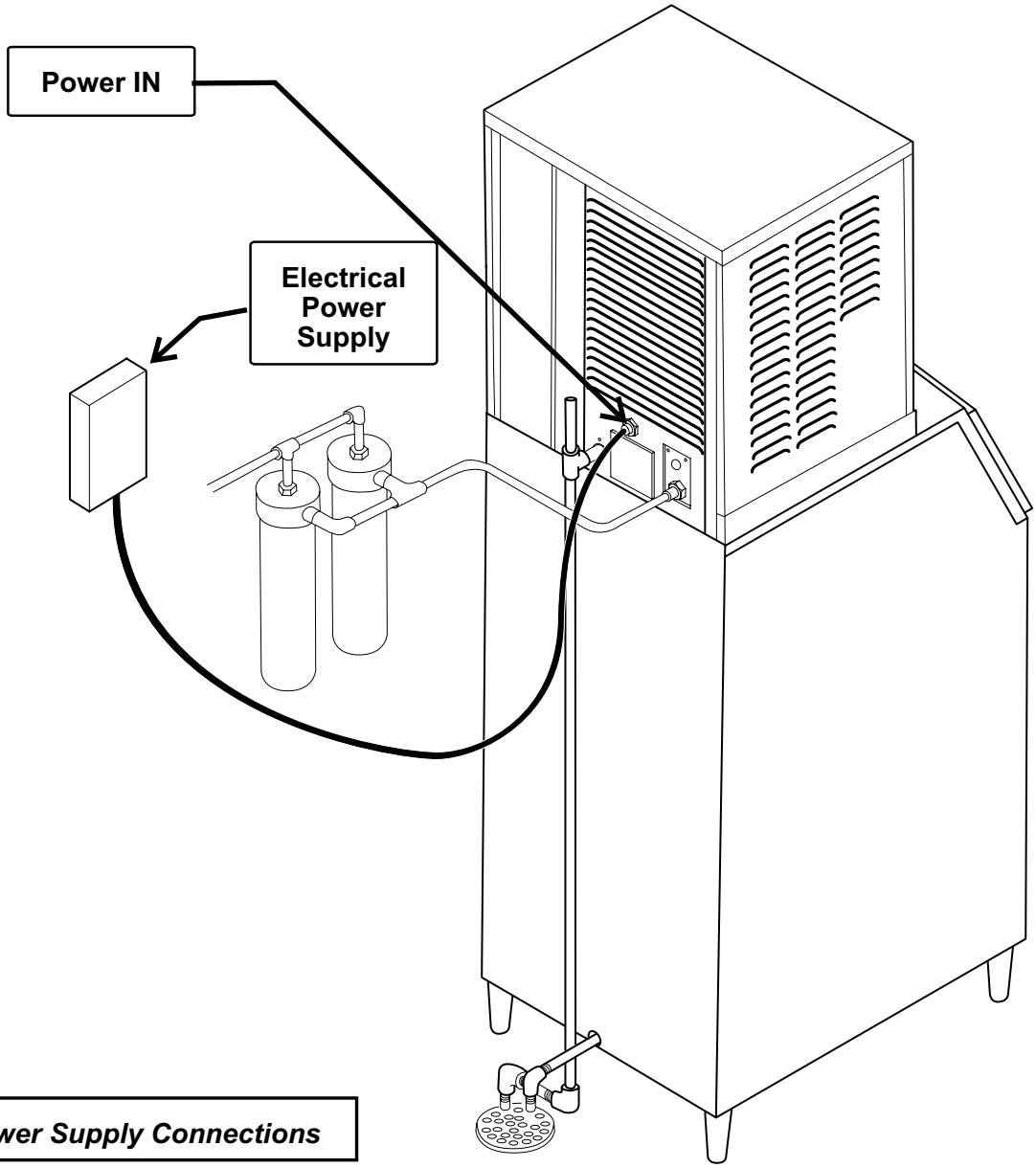

Power Supply Connections

After Utility Connections

1. Level the cabinet, use the leg levelers on the end of the legs to adjust the cabinet height.

2. Wash out the bin. If desired, the interior of the bin could be sanitized.

3. Locate the ice scoop (if supplied) and have it available for use when needed.

Final Check List:

____1. Is the unit located indoors in a controlled environment?

____2. Is the unit located where it can receive adequate cooling air?

____3. Has the correct electrical power been supplied to the machine?

____4. Have all the water supply connections been properly made?

____5. Have all the drain connections been properly made?

____6. Has the unit been leveled?

____7. Have all unpacking materials been removed?

____8. Has the bin control been installed?

____9. Is the water pressure adequate?

____10. Have the drain connections been checked for leaks?

____11. Has the bin interior been wiped clean or sanitized?

____12. Have any water filter cartridges been replaced?

Component Description and Function

Reservoir: Contains the water for ice making.

Water Inlet Valve: Opens to allow water into the reservoir. Located on the back panel.

Water Level Sensor: Controls the size of the ice cube by measuring how much water is used in a cycle. It consists of a float, stem and electric eye. The stem will move slightly when the pump is on, this is normal. As the machine makes ice the reservoir water level will fall and the visible portion of the stem will slide down thru the slot in the sensor body.

Evaporators/Freezing Compartment: Location of the evaporators. Ice forms on the evaporators and is released when warmed up during the harvest cycle. The freezing compartment is fully insulated for maximum efficiency.

Cube Deflector: The slots in the inclined deflector allows the water falling from the evaporators back into the reservoir, but when ice falls during harvest, the ice slides off the deflector into the bin.

Refrigeration Service Access Valves: Only to be used by a certified technician. Allows access to the refrigeration system for diagnostic information.

Water Pump: Forces the water from the reservoir to the top of the evaporators. The motor is separated from the reservoir water to minimize contact with the water.

Purge Valve: Opens during the early part of the harvest cycle to drain the reservoir.

Ice Sensor: A photo-electric eye set, located at the front and back of the cube port.

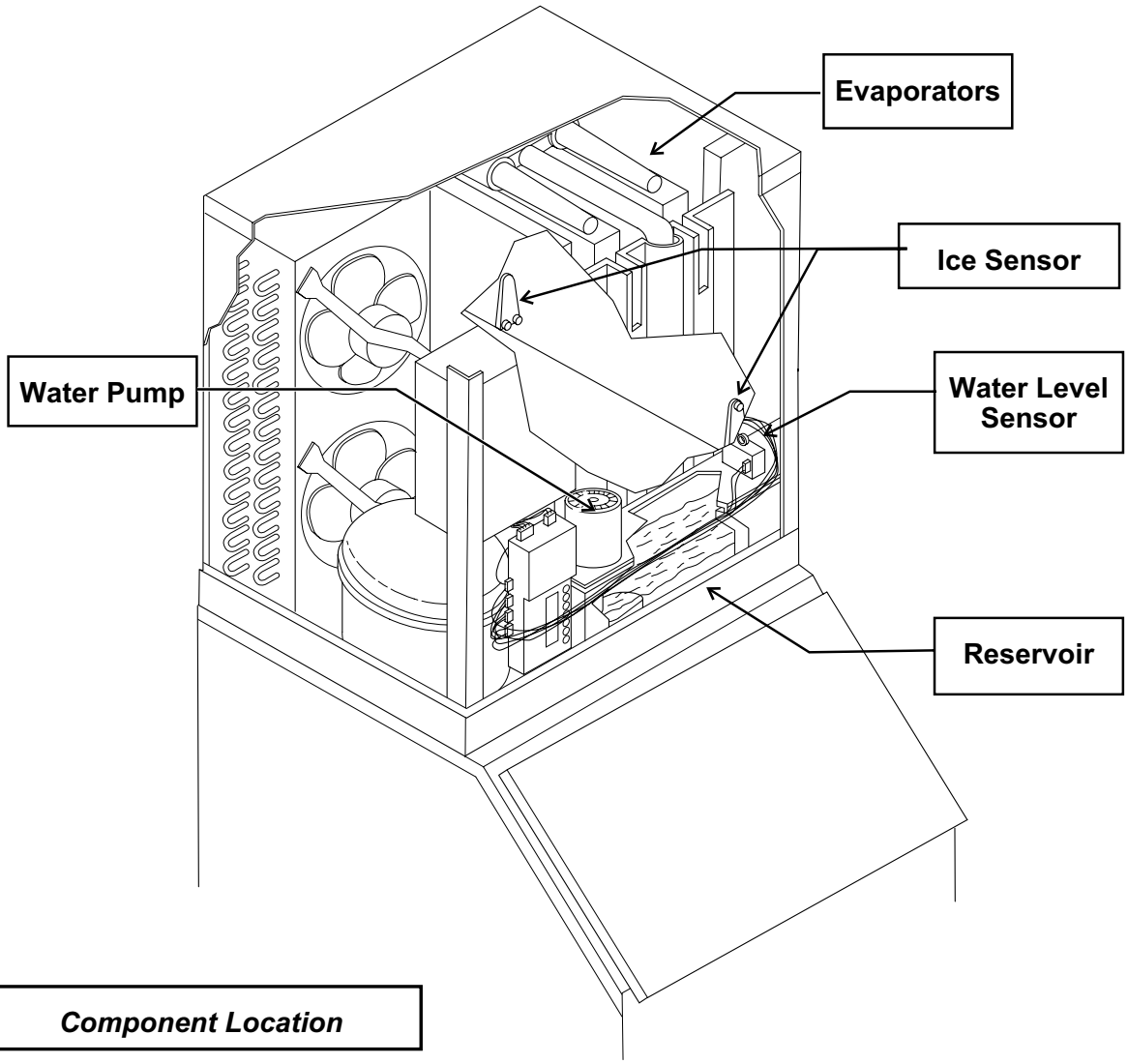

Component Location

AutoIQ Controller

Indicator Lights:

- **Bin Full:** On when bin is full, goes on and off as ice falls during a harvest cycle.
- **Freeze:** On when the unit is in the Freeze cycle, blinks when a freeze mode is pending.
- **Harvest:** On when the unit is in the Harvest cycle.
- **Clean:** On when the unit is in the Clean cycle, blinks when preparing for a clean mode.
- **Off:** On when the unit has been switched off, blinks when the machine is preparing to shut off.
- **Water:** On when the controller has identified a problem with the water system.
- **Refrigeration:** On when the controller has identified a problem with the refrigeration system.

Cycle Definitions:

- **Freeze:** The refrigeration system is operating to remove heat from the evaporators. The compressor, fan motor (if air cooled) and water pump are ON.
- **Harvest:** The refrigeration and water systems are operating to harvest the ice cubes. While the compressor is on for the full cycle, the water pump will be off at the beginning and inlet water valve will switch off before the end.
- **Clean:** The Inlet Water Valve opens to fill the reservoir. The Water Pump starts. The Clean indicator light is switched ON. A manually initiated rinse flushes the system.

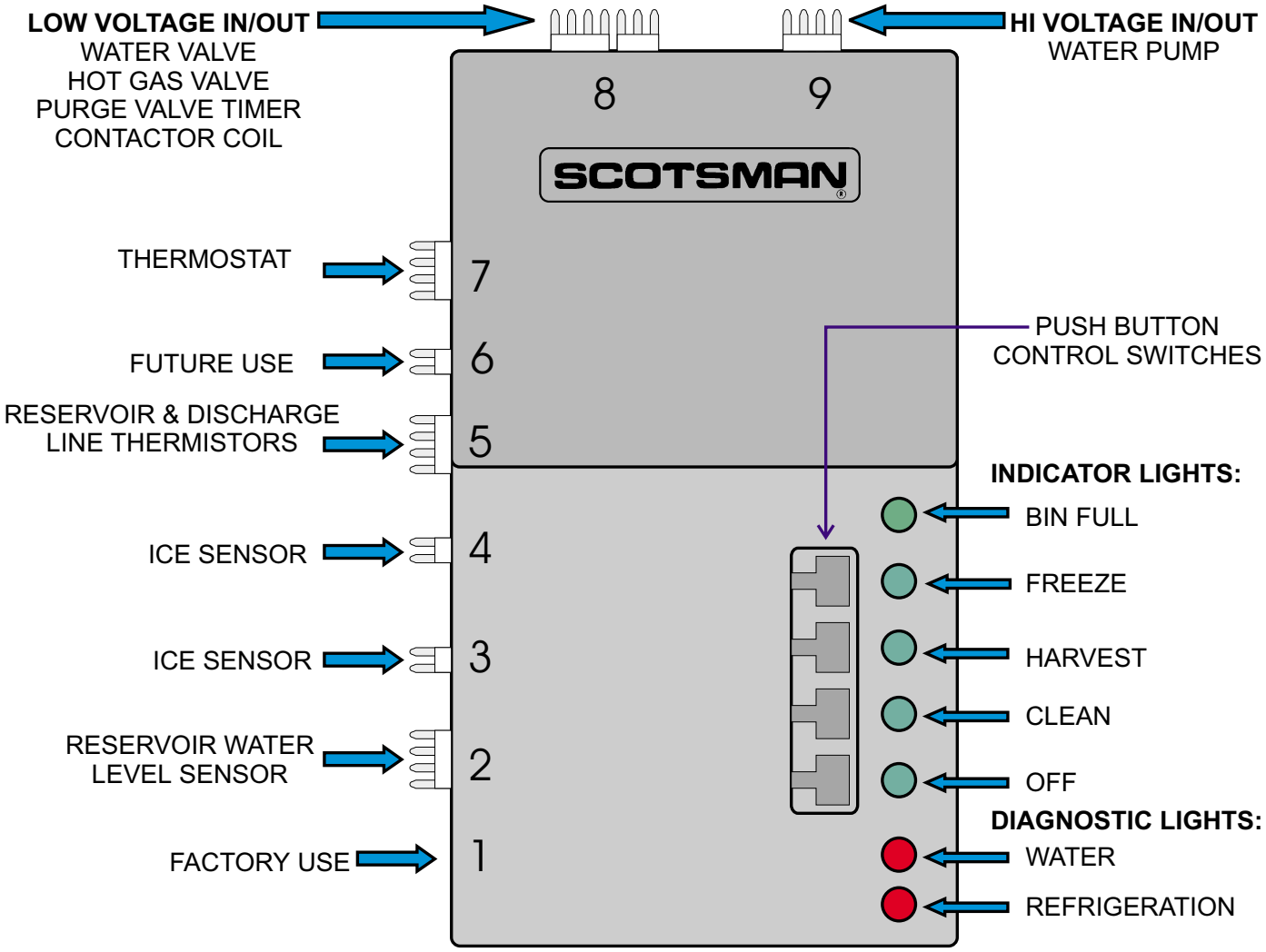

How To Operate The AutoIQ Controller

The AutoIQ Controller is a microprocessor based device that receives input from several sources and switches various components on and off.

Its manual control is thru the use of the Push Button Control Switches

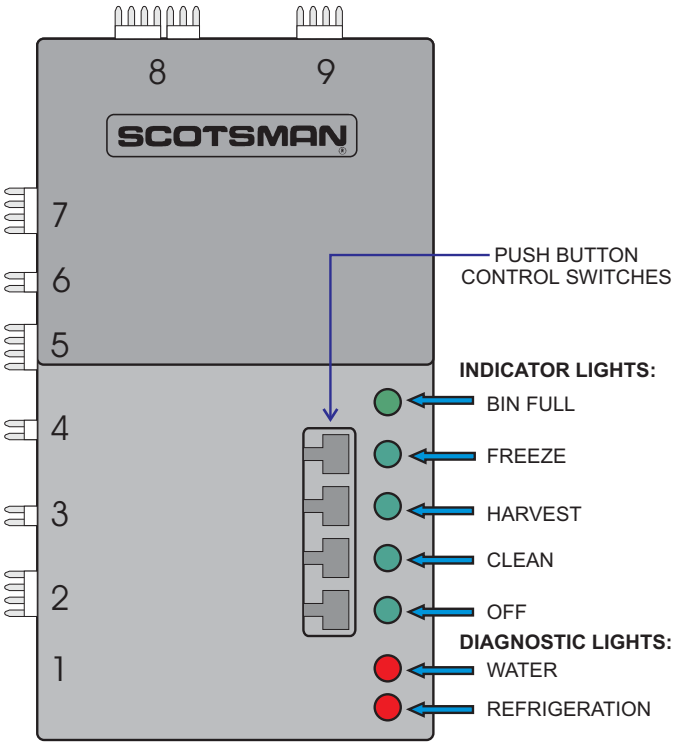

1. **Freeze Button.** Pushing and releasing this button starts or restarts the machine. The Controller remembers what cycle it was last in and returns to that cycle.

2. **Harvest Button:** Pushing and releasing this button will cause the machine to go directly to a Harvest Cycle. Can be done from Freeze or Off. The machine will switch Off at the end of the Harvest cycle.

3. **Clean Button:** Pushing and releasing this button will cause the machine to empty the reservoir, refill and leave only the water pump on for circulation of ice machine cleaner. After the ice machine cleaner has circulated for about 10 minutes a second push of this button will switch on the rinsing system to flush out the dissolved scale and ice machine cleaner.

4. **Off Button**: Pushing and releasing this button will switch the machine OFF at the end of the next cycle. If the button is pushed and HELD for more than 3 seconds, the unit will switch off immediately.

To Reset Machine (machine off, error light on): First push and release the Off button, then push and release the Freeze button.

Diagnostic Light Recall

To recall the last error on the blue housing CM^3 controller:

1. Switch the unit OFF by holding the OFF button for longer than 3 seconds.

2. Hold the Off button down again until the Purge Setting indicators (Green Lights) are on.

3. Push and release the Harvest button.

The last error code stored in the controller will be displayed and the purge setting will disappear.

Push the Harvest button again and the second-to-last error code will be displayed. The bin full light will also be on to signal that this is the second-to-last code.

Pushing the Harvest button again will display the last error code again. Only two error codes are available for display.

If no error code exists, no code will be displayed and there will be NO LIGHTS showing.

To return from the display of the last error, do nothing for 60 seconds or push and hold the Off button.

After returning from the display of the last error (Off light glows), the machine may be returned to the ice making process by pushing and releasing the Freeze button.

Initial Start Up

1. Remove the front panel.

2. Locate the AutoIQ Controller.

3. Switch on the electrical power. Note that the controller's indicator lights all flashed on briefly, then the two red lights flashed on and off while the Freeze and Harvest (for CME306) or Freeze, Harvest and Clean (for CME456) lights are on. After 20 seconds the red lights switch off, the Bin Full and Off lights are on and then the Bin Full light goes out, leaving the Off light glowing.

4. Open the water supply valve.

5. Push and release the Freeze cycle push button.

Initial Start

- The Freeze light will begin to blink.
- The Hot Gas Solenoid valve will be open.
- The Purge valve will be open.
- The Water pump is on.
- The hot gas and purge valves close and the inlet water valve opens to fill the reservoir. The inlet water valve will shut off when the reservoir is full.
- The compressor starts.

Freeze Cycle:

- The Freeze indicator light will be on. The machine will stay in a Freeze cycle for many minutes. Slush may appear in the reservoir, it is temporary and normal.
- The fan motor (of air cooled models) will begin to turn and soon warm air will be forced out the back of the cabinet.
- The pump will stop for a few seconds a few minutes into the freeze cycle.
- The freeze cycle will continue until the water level in the reservoir drops to its factory set point. At that time the CME306 proceeds to the harvest cycle, but the CME456 will refill the reservoir and go into harvest the NEXT time the water level drops to the set point.

Harvest Cycle:

- The Harvest indicator light will be ON,
- The hot gas valve will open.
- The purge valve will be open for 40 seconds.
- The water pump will stop. It will restart in less than 40 seconds.
- The purge valve closes and the Inlet water valve will open for a short time to add water.
- The Bin Full indicator light will go on and off as ice falls from the evaporators.

6. Machines are shipped from the factory with the purge level set to accommodate average water conditions. To achieve optimal machine performance, set the purge level to the minimum setting.

Note: While the amount of water purge is adjustable, only those installations with a water supply known to be excellent (very low) should adjust to the minimum setting. See page 20 for purge adjustment instructions.

7. The machine's correct cube size should result in ice falling from the evaporator in vertical strips of 8 - 10 cubes.

8. After about 6 minutes the machine will return to a freeze cycle.

Note: After the first harvest, the controller adjusts the harvest time as needed to release all ice.

9. The water valve will re-fill the reservoir at the beginning of freeze.

10. Collect and discard the first batch of ice. Rinse out the bin.

11. Fill out the Customer Evaluation and Warranty Registration. Send it to Scotsman.

12. Replace the front panel.

13. Inform the user of the location and telephone number of the local service company. Also inform the user of the required maintenance of the machine.

Notes On Operation:

1. The bin control signals the ice machine to shut off whenever the bin becomes full, but the machine will not stop until it has finished the next harvest cycle. This last harvest cycle will be longer than the rest.

2. After the bin has filled the unit will not be able to restart for 4 minutes. However, if needed, the Freeze button may be pushed to restart the unit.

For example: If ice is removed from the bin immediately after the machine has filled up and shut off, the Bin Full light will be ON and the machine will not restart for 4 minutes.

3. If the bin controls sense a bin full signal before any water is used (float stem up), the machine will shut off on bin full.

If there was a problem during Initial Start Up:

If an error light came on, check the following.

1. Water error.

A water error could have been determined by the AutoIQ Controller if the inlet water valve does not fill the reservoir, or if the water pump does not start and lower the water level.

2. Refrigeration error.

A refrigeration error could have been determined by the AutoIQ Controller if the water temperature did **not** drop during the freeze cycle. The controller will next check the compressor discharge temperature, If the discharge temperature is too low, the refrigerant error light will be switched on, and the machine will Shut Down.

Note: Reset and restart the machine by pushing and releasing the Off push button switch, and then pushing and releasing the freeze push button switch.

Adjustments

How to adjust the water cooled discharge pressure

Water cooled models use a water regulating valve to control how much cooling water flows thru the water cooled condenser. At the top of that valve, located in the back of the ice machine, is an adjustment stem.

To Adjust:

1. Attach a refrigeration manifold gage to the discharge access valve.

2. While the unit is in the freeze cycle, determine the discharge pressure, it should be about 245 PSIG.

3. If needed, rotate the adjustment stem to increase or decrease the pressure:

A. To increase discharge pressure (reduce water flow) rotate the stem counter-clockwise.

B. To decrease the discharge pressure (increase water flow) rotate the stem clockwise.

Remove the manifold when done. Note: The water outlet temperature should be between 100-110 when the valve is properly set.

Thermostatic Expansion Valve:

The TXV is not adjustable, do not attempt to adjust it.

How to Adjust the Amount of Water Purge

Adjustment is done by use of the control buttons on the AutoIQ Controller. Examine the next section to become familiar with the AutoIQ Controller before beginning.

1. If the machine is on, push and hold the OFF button for more than 3 seconds, then release it. This switches the machine Off.

2. Push and hold the OFF button for more than 3 seconds (just until all lights flash on) then release it. Do not hold it in it too long.

3. Examine the green lights. They should have all flashed once, then certain ones will have turned on to indicate which purge level the machine is set at. There are 5 levels of purge available:

- 1. **Maximum Purge** is when <u>All</u> <u>5</u> lights are ON. Use for extreme water conditions. Note: This setting may extend the Harvest cycle and reduce capacity.
- 2. **Heavy Purge** is when these **4** lights are ON: <u>Freeze</u>, <u>Harvest</u>, <u>Clean</u>, <u>Off</u>. Use for severe water conditions.
- 3. **Standard Purge** (factory setting) is when these **3** lights are ON: <u>Harvest</u>, <u>Clean</u>, <u>Off</u>. Use for moderate to severe water conditions.
- 4. **Moderate Purge** is when these **2** lights are ON: <u>Clean</u>, <u>Off</u>. This is for typical water conditions.
- 5. **Minimum Purge** is when this light is ON: <u>Off</u>. For excellent water conditions.

Adjust by pushing and releasing the Freeze button. Pushing and releasing the Freeze button increases the purge one level up to the maximum, then it goes to the minimum.

4. The machine will automatically restart after 60 seconds of no switch inputs, or restart the machine by pushing in and holding the Off button for more than 3 seconds, then releasing it. The unit will then be Off. From there the machine may be placed in a freeze cycle by pushing and releasing the Freeze button.

How This Machine Works

This section is intended for the technician. It is not necessary for the normal operation and maintenance of the machine.

The AutoIQ Controller operates the ice machine by monitoring several input measures and switching various loads on and off.

Water System:

Water flows into the ice machine during the harvest cycle thru the inlet water valve. The water valve will NOT be open the complete length of the harvest cycle. The water pump forces water to the top of the evaporators, both in the Freeze and Harvest cycles. Un-frozen water falls thru the cube deflector and back into the reservoir. As water is turned into ice, the water level in the reservoir falls, and at the point where the cubes are fully formed, the Water Level Sensor indicates to the AutoIQ Controller that it is time to begin the Harvest cycle.

During the Harvest cycle, water again enters the water reservoir, and a purge valve opens to drain the reservoir and dilute the concentration of accumulated minerals. The purge valve is opened for a fixed amount of time, but the water pump does not start right away, but at a time determined by the AutoIQ Controller's purge setting. The higher the purge setting, the sooner the water pump will start, and more water will be drained out.

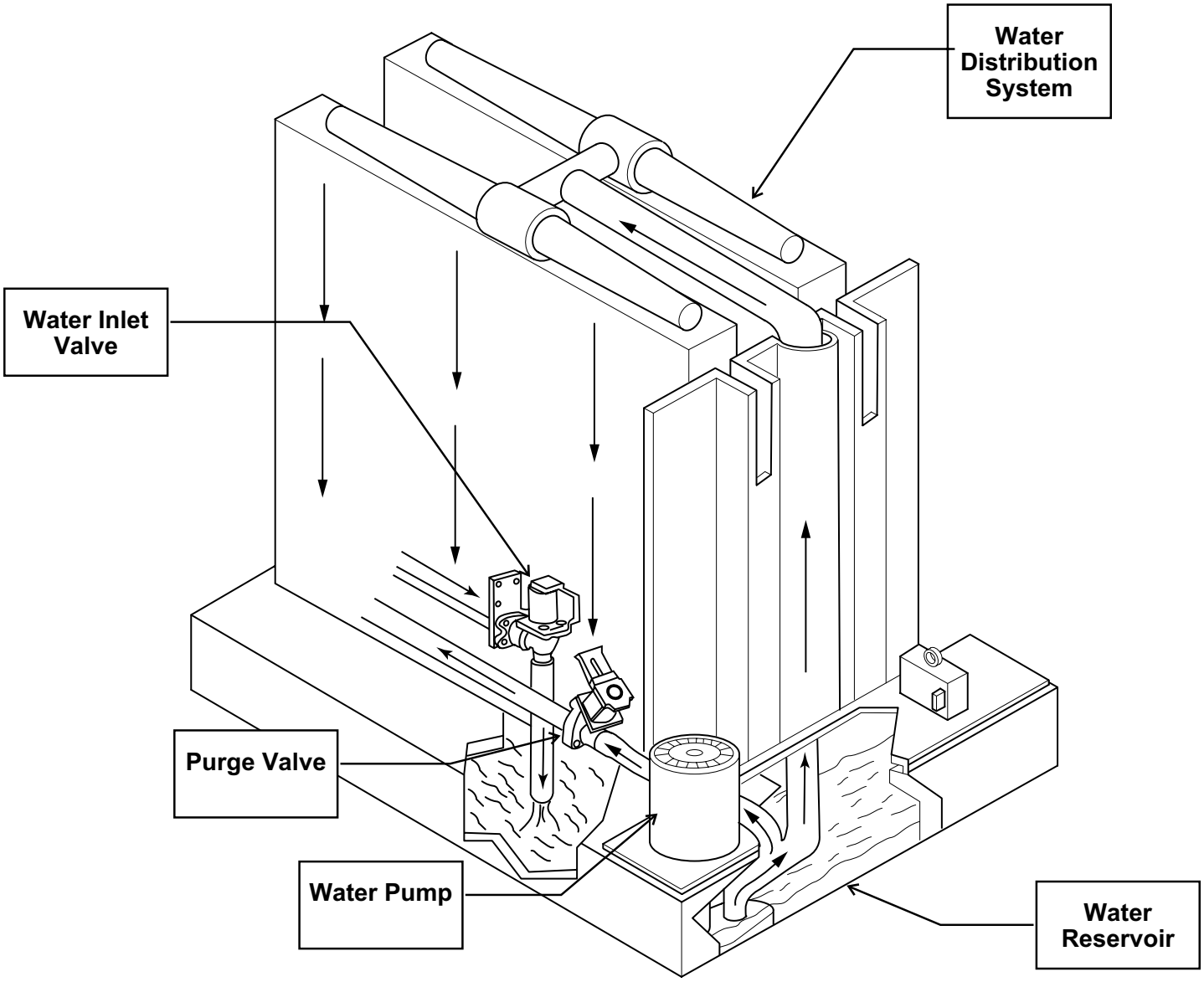

How This Machine Works

Refrigeration System

The refrigeration system is similar to that of most commercial cube ice machines. Heat is removed from the water and discharged out the condenser during the freeze cycle. As liquid refrigerant passes thru the Thermostatic Expansion Valve, it enters the bottom of the evaporators, and ice will form at the bottom first.

The CME456 has two Expansion Valves and Two Check Valves. Each Expansion Valve meters refrigerant into a single evaporator. The check valves prevent cross-metering of refrigerant.

When cubes need to be released (Harvest) the Hot Gas Valve is opened and Hot discharge gas flows directly from the compressor to the evaporator inlets.

This warms up the evaporators and the surface of the ice frozen to the evaporator surface melts. Ice then falls into the bin.

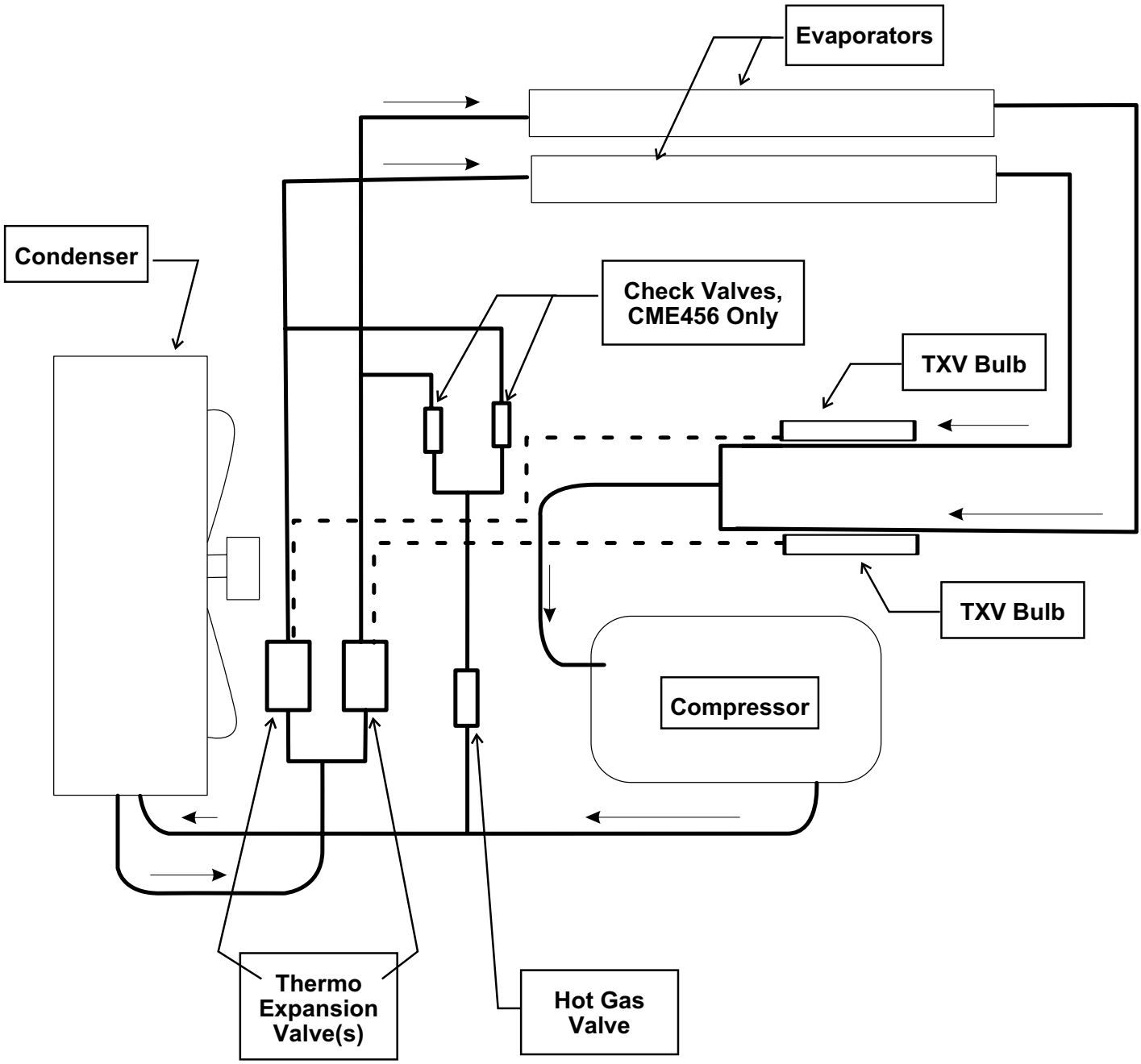

Technicians Only: Freeze Cycle Operational Sequence

Assuming the machine has been operational, the Freeze cycle begins with the end of Harvest:

- Condenser fan is OFF
- Water Inlet Valve is CLOSED
- Water Pump may be ON
- Compressor is ON
- Hot Gas Valve is OPEN

The Controller, from the start of the freeze cycle:

1. Switches on the Freeze indicator light and shuts off the hot gas valve.

2. Opens the water valve to top off the reservoir. Water must fill the reservoir within 130 seconds or the controller shuts the machine down. It will automatically try to restart in 20 minutes.

3. Measures the discharge temperature.

4. Starts the fan motor (air cooled only). The Controller checks the discharge temperature and cycles the fan(s) on every 12 seconds and off for 20 seconds (CME456) or 45 seconds (CME306) if the temperature is low.

If the discharge temperature exceeds the design maximum the controller shuts the unit off.

5. Checks for a “bin full" signal throughout the cycle.

6. Measures the reservoir water temperature. If the machine is operating correctly, the reservoir water temperature will fall at a standard rate. The Controller will be checking to see if the water temperature fall matches that rate.

If not, it re-checks the discharge line temperature. If too low, it stops the unit. If the discharge temperature is acceptable, the water system is checked by shutting off the water pump and determining if the water level goes up enough. If it does not, it is assumed that there is a water pump problem and the controller shuts the unit off.

If the water level does “measure up" the water pump is restarted and the AutoIQ Controller then measures how long it takes to lower the water level. If the water level does not fall, the machine Shuts Down on a Water Error.

7. Once per cycle the machine will shut off the water pump. It **only** does this when the water temperature reaches a preset minimum. The pump will only be off for a few seconds. After the pump restarts, the inlet water valve opens to refill the reservoir.

8. As the machine makes ice, the water level in the reservoir will ultimately fall to the Harvest Level .

- CME306 fills the reservoir once at the beginning of Freeze
- CME456 fills the reservoir at the beginning of freeze and one more time about ½ way through freeze.

Air cooled models will switch off the fan motor a few seconds before harvest begins.

Note: If the freeze cycle exceeds the preset Maximum (45 minutes), the Controller will shut the unit off.

9. At the end of Freeze cycle:

- Water level = below harvest position
- Condenser fan will be off
- Water inlet valve will be off
- Water pump will be ON
- Compressor will be ON
- Hot gas valve will be off

At this point Harvest begins and the AutoIQ Controller switches the Harvest indicator light ON.

Restarts:

If restarting after shutting off because the bin was full, the first freeze cycle sequence is like this:

1. Purge valve is open.

2. Pump starts.

3. Purge valve closes.

4. Water valve opens to fill the reservoir.

5. Compressor starts.

Note: If there is a power interruption, after power is restored the machine will restart, go thru a brief Freeze cycle and then go thru a 5 minute Harvest cycle. The Freeze light will be blinking - even when the machine is in harvest.

Error Restarts:

The machine automatically attempts to restart 50 minutes after a shut down. If another problem occurs in the next cycle, the machine will attempt one more restart. If another problem occurs in the next cycle, the machine will be off and must be manually reset.

Technicians Only: Harvest Cycle Operational Sequence

Harvest

The (air cooled model) fan(s) is(are) off.

The purge valve opens, and will remain open for 40 seconds.

The water pump shuts off, it will restart in less than 40 seconds, depending upon the Purge Level set.

The water pump restarts and pumps out water thru the open purge valve until the valve closes.

The inlet water valve then opens for about 22 seconds to add some water.

During the Harvest Cycle, ice will be falling from the evaporators and between the ice sensor's electric eyes. The AutoIQ Controller monitors the ice falling and stays in the Harvest Cycle until ice quits going thru the electric eyes.

The maximum harvest time is 13 minutes. The first Harvest after a restart will be a long one to establish a base line, then the actual time it took to release the ice is used to determine the length of the next harvest cycle.

If no cubes fall (or are sensed) by the end of Maximum Harvest Time, the machine senses a refrigeration error. If the next cycle also produces a refrigeration error, the machine Shuts Down.

Note: The last harvest cycle before shutting off on bin full is 6 minutes long, unless the shut down was initiated by a closed Bin Thermostat. In that case the last harvest cycle will be normal.

The machine will not restart for 4 minutes after switching off on Bin Full, unless the freeze button is pressed.

Note: If during a Bin Full shut down, the machine has not restarted for 12 hours, the compressor will run for 30 seconds to clear its oil of refrigerant.

Continuous Run Time:

A unit that operates 24 hours a day 7 days a week is too small for the user's needs. To maintain harvest integrity, the controller will extend the harvest time up to 6 minutes every 15th consecutive harvest cycle. Note: The length of this harvest varies depending upon discharge temp.

Bin Thermostat (for those units so equipped):

In normal ambients the thermostat will react to ice on the bulb in a few seconds. Reaction after removal will take about a minute under normal conditions, and longer in colder rooms.

Diagnostic Lights and Manual Resets

The controller will shut the machine off if a malfunction is sensed. The Controller will restart the machine 2 times, with a 50 minute interval between restarts. If a malfunction is still present after the second restart, the machine will then shut off and must be manually reset. During the restart interval, the machine will be off and a diagnostic code indicated.

The exception to this is lack of water. The machine will always try to re-fill the reservoir every 20 minutes.

Diagnostic Code Table

If a Diagnostic Light	Water Light	Refrigeration Light
Blinks once and repeats	Water pump did not start	Very long ice harvest
Blinks twice and repeats	Lack of water fill	No harvest of ice
Blinks three times and repeats	not used	High Discharge Temperature
Is ON all the time	Water valve leaking thru rapidly	Check for low discharge temperature or long freeze cycle
Both On all the time	Check for thermistor set unplugged or failed	

Note: Diagnostic lights remain on until controller is manually reset or until it successfully restarts the machine.

Sanitation and Cleaning

It is the User's responsibility to keep the ice machine and ice storage bin in a sanitary condition. Without human intervention, sanitation will not be maintained. Ice machines also require occasional cleaning of their water systems with a specifically designed chemical. This chemical dissolves mineral build up that forms during the ice making process.

Sanitize the ice storage bin as frequently as local health codes require, and every time the ice machine is cleaned and sanitized.

The ice machine's water system should be cleaned and sanitized a minimum of twice per year.

In Place Cleaning of the Water System:

1. Remove all ice from the bin.

2. Remove the front panel.

3. Push and release the Harvest button (this releases any ice on the evaporators and warms them up).

4. Wait for the machine to finish the Harvest cycle (the machine will stop).

5. Remove the the freezing compartment cover and both inner splash panels.

6. Remove the sump cover by unplugging the wire harness from the water level sensor, then removing the screw holding the cover to the reservoir.

Unwind the wires from the sump cover and lift the sump cover and water level sensor up & out of the machine.

7. Pull the float off the float stem. Squeeze the water sensor mounting tabs together and remove the sensor from the sump cover.

8. Remove the cube deflector from the machine by lifting it up at the front, rotating it 90° clockwise, then pulling it out of the machine.

9. Place the cube deflector, sump cover, float, float stem and both inner splash panels into a separate, clean container.

10. Mix a solution of 8 ounces of Scotsman ice machine cleaner and 1 gallon of warm (95-115°F.) water. Use the solution to scrub the cube deflector, float, float stem, sump cover & splash panels in the separate container.

⚠CAUTION	**Scotsman Ice Machine Cleaner contains acids.** Acids may cause burns.
	If concentrated cleaner comes in contact with skin, flush with water. If swallowed, do NOT induce vomiting. Give large amounts of water or Milk. Call Physician immediately. Keep out of the reach of children.

11. Reassemble the water level sensor to the sump cover. Insert float stem through sensor and push float onto stem. Reconnect sensor wires and place assembly onto reservoir.

12. Push and release the Clean button. The Clean indicator light will blink and the pump will restart.

13. After water stops flowing in, lift sump cover and pour 12 ounces of Scotsman Ice Machine Cleaner into the reservoir water. Return the sump cover and freezing compartment cover to their normal positions.

14. After the ice machine cleaner has circulated for 10 minutes, push and release the Clean button. This starts the rinsing process. The Clean indicator light will be ON. Note: The rinse process flushes any residual cleaner out of the ice machine's water system.

15. Continue the rinsing process for 20 minutes, then push the off button to switch the machine off.

16. Go to the next step to sanitize the machine or go to step 23 to finish the cleaning process.

17. Mix 2 gallons of Sanitizer solution. Follow local codes for Sanitizer.

Note: A possible sanitizing solution may be made by mixing 1 ounce of liquid household bleach with 2 gallons of warm (95-115°F.) potable water.

18. Push and release the Clean button again.

19. After water stops flowing in, pour 24 ounces of Sanitizer solution into the reservoir water.

20. After the solution has circulated for 10 minutes push and release the Clean button. This starts the rinse process. Sanitize the ice storage bin while waiting.

21. Continue the rinsing process for 20 minutes, then push the off button to switch the machine off.

22. Remove the freezing compartment cover and spray or wash all interior surfaces of the freezing compartment including the inside of the cover with sanitizer solution.

23. Repeat step 6 and thoroughly immerse the splash panels, float, float stem, sump cover and cube deflector in the sanitizing solution.

24. Return the cube deflector, inner splash panels, water sensor, float and sump cover to their original positions. Secure sump cover with the original screw.

25. Reconnect wire harness to water level sensor.

26. Return the freezing compartment cover to its original position. Push and release the Freeze button.

27. Return the front panel to its normal position and secure it to the machine with the original screws.

To drain reservoir completely (if desired):

1. Remove front panel.

2. Push and hold the Off button.

3. Push and hold the Clean button for 3 seconds to activate the purge valve.

To Sanitize the Ice Storage Bin

1. Remove all ice.

2. Remove baffle.

3. Switch ice machine OFF or wait for it to be in a cleaning cycle.

4. Mix a 1 gallon solution of warm (95-115°F.) water and sanitizer. Follow local codes for sanitizer.

5. Wash or spray the entire interior of the ice storage bin with the sanitizer solution. This includes the bottom of the ice machine and the inside of the door, the door gaskets (if any) and door frame.

6. Pour excess sanitizer into the bin to flush the drain system.

7. If the approved sanitizer requires a rinse, rinse all interior surfaces with potable water.

Additional Maintenance: Water Distributors

It may become necessary to remove the water distributors from the top of the evaporator and clean (de-mineralize) them outside of the ice machine.

1. Remove front panel.

2. Push and release the OFF button.

3. Remove the evaporator cover.

4. Lift up at the center of the water distributors and disconnect the distributors from the manifold.

5. Repeat for all evaporators and distributors.

6. Examine the top of the evaporators. The Water Distribution Channels must be free from mineral build up. If build up is evident, scrub the channels with Scotsman Ice Machine Cleaner and a plastic bristle brush.

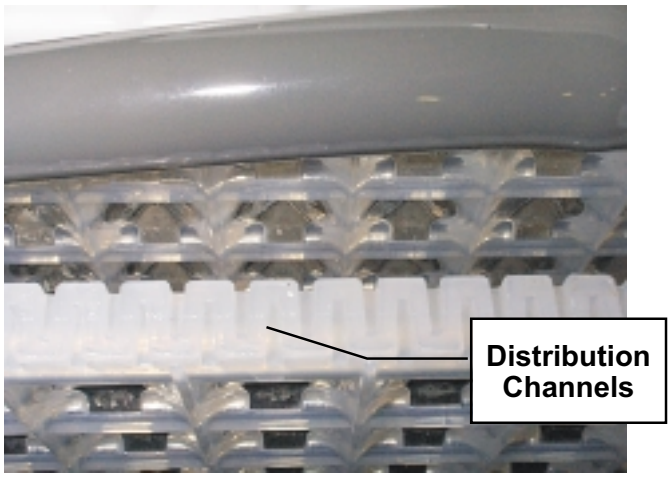

7. Examine the water distributors. Although they are made of a material that is resistant to mineral build up, some may be present. Soak or scrub the distributors in or with a solution of Scotsman Ice Machine Cleaner and warm potable water.

8. Return the water distributors to their normal installed position.

Distributors Must be Fully Seated as Shown

9. Return all panels to their original positions.

10. Push and release the clean button to flush the water system.

11. After the machine stops, push and release the Freeze button.

12. Replace the front panel.

Additional Maintenance: Ice Sensors

The ice sensors use a system of infrared emitting and receiving components to sense ice. They are located at the bottom of the ice outlet port. They must be free of mineral build up to function properly. To check:

1. Remove front panel.

2. Push and release the off button.

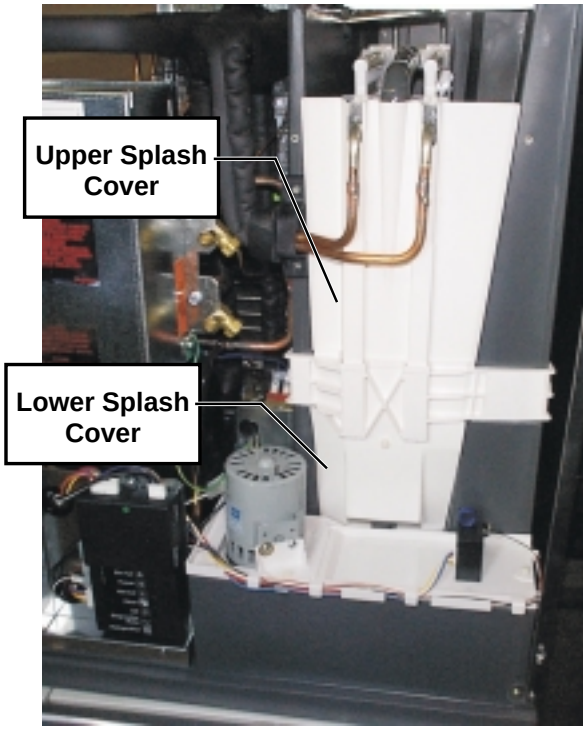

3. Remove the evaporator cover. Remove the upper and lower splash covers.

4. Remove the cascading shield (CME456 only).

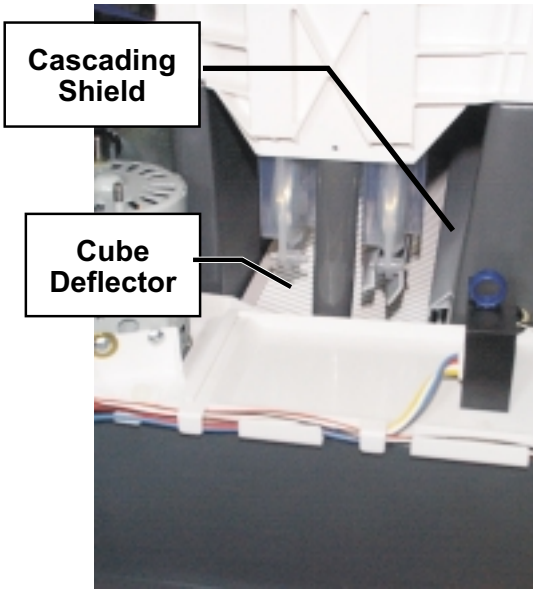

5a. If there is room above the unit, remove the top panel and reach down from above to remove the back sensor.

5b. If there is no room above the unit, go to the back of the machine and push the back sensor out of its socket.

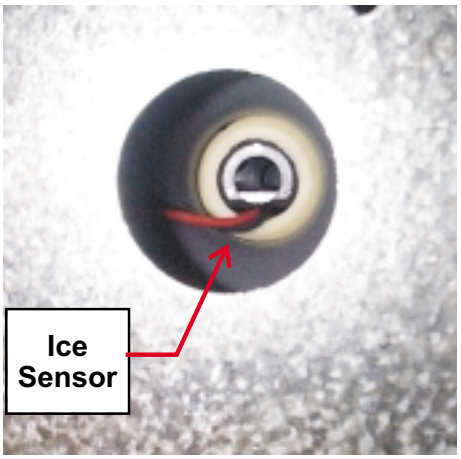

Back Ice Sensor Port (step 6)

5c. If there is no room above or behind the machine, remove the sump cover and the cube deflector. Reach under the evaporator(s) and grasp the back sensor's tab. Pull the sensor out of its socket.

Note: The back sensor has a quick connect about 6" from it and there is extra wire is bundled behind the controller. Pull the extra wire from behind the controller and/or unplug the back sensor.

6. Push the front sensor out of its socket.

7. Examine the bottom of the sensors, there are two lenses in each sensor, check that they are clear of mineral build up. They may be wiped clean with ice machine cleaner to assist in removal of the build up. Be sure to drain the reservoir or go thru a Clean cycle to remove residual cleaner.

Note: Do NOT use abrasive materials or cleaner on the bin sensor lenses. A soft toothbrush is an effective tool for cleaning these sensors.

8. Reverse to reassemble.

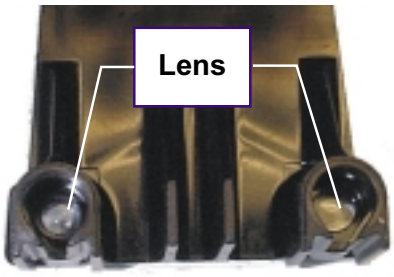

Lens Location in Ice Sensor

Additional Maintenance: Water Level Sensor

Water Level Sensor:

Clean the lenses inside the water level sensor.

1. Remove front panel.

2. Push and hold the Off button until the ice machine stops.

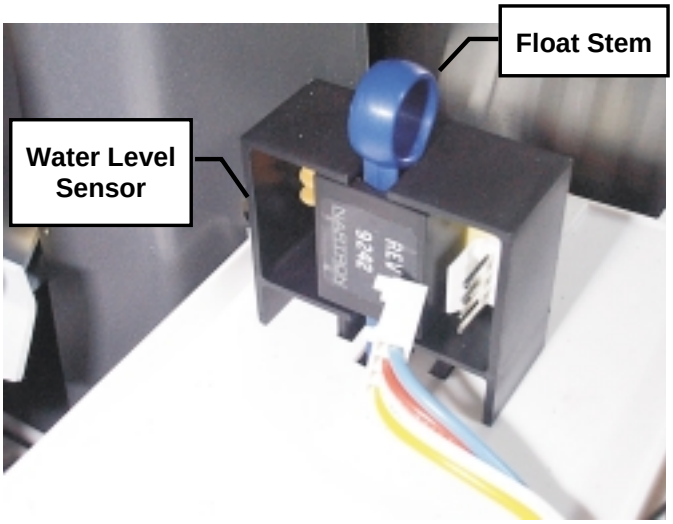

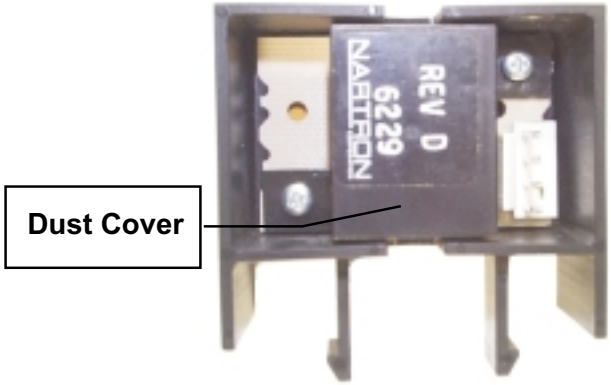

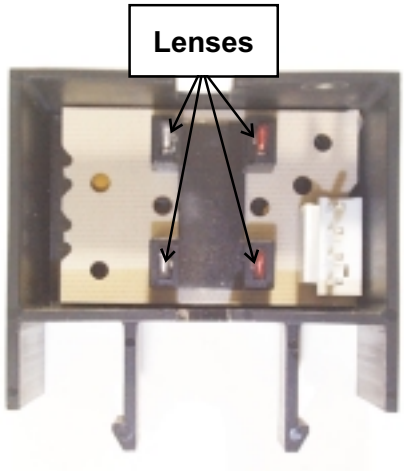

3. Unplug the wire harness from the sensor.

4. Remove the reservoir cover.

5. Lift up on cover and pull float from float stem.

6. Unsnap sensor from cover. Remove the sensor from its installed position.

7. Remove dust cover.

8. Wipe lenses clean with a cotton swab.

Reverse to reassemble.

Note: Be CERTAIN that the sensor has be properly reassembled. Wire connection must be in the position shown in the photos.

Additional Maintenance: Air Filter Replacement

Air Filter Cleaning / Replacement - Do Monthly

1. Remove the front panel.

2. Remove the top panel.

3. Remove the left side panel.

Remove the filter from the side panel. Wash it with cold water to remove all embedded dust. If filter is torn, replace it.

5. Return all panels to their original positions. Secure them with the original screws.

Inlet Water Valve Screen - Do if water flow becomes restricted.

The inlet water valve has a screen on its inlet side to keep debris from flowing into the valve. In some cases, this screen may become clogged or restricted by debris build up. Check for the proper water flow:

Flow rate is 1.25 G.P.M.

1. Remove front panel.

2. Obtain a measuring cup and a watch.

3. Pull the water discharge tube out of the reservoir and place it in the cup.

4. Push and release the Harvest button.

5. If working properly, the water valve will fill an 8 oz cup in about 3-4 seconds. Be prepared to push the Off button. If it does not, the water valve inlet or other water device is restricted.

To Check the Inlet Water Valve Screen.

1. Disconnect the electrical power.

2. Shut off the water supply.

3. Disconnect the water supply from the ice machine.

4. Unscrew the water fitting at the back of the ice machine.

5. Examine the inlet screen, if dirty, brush off screen.

Note: Screen is not replaceable, and may only be removed by taking off the covering bracket. The bracket forms part of the inlet water system, and must be water tight to the valve body, removal is not recommended.

6. Reverse to reassemble.

Additional Maintenance: Condenser

To Clean the Air Cooled Condenser

1. Remove the front panel.

2. Push and release the Off button.

3. Remove the top panel.

4. Remove the left side panel.

5. Check the fan blade(s) and condenser for grease or dust build up.

Because air flow is from the inside of the cabinet out, the inside of the condenser fins will have the most build up.

A. Place the inlet hose of a vacuum cleaner in the condenser shroud.

B. While the vacuum cleaner is on, blow compressed air from the back of the condenser thru the fins.

C. If grease is present, use coil cleaner on the condenser. Be sure to wipe up any excess coil cleaner.

7. Additional access can be gained by removing the fan and motor shroud assembly.

A. Remove the 6 sheet metal screws holding the assembly to the condenser.

B. Unplug the fan motor(s) from the wire harness.

C. Lower and tilt the assembly until it clears the refrigerant lines.

D. Lift it out of the machine.

8. After cleaning, return all panels except the front to their original positions.

9. Push and release the Freeze button.

10. Replace the front panel.

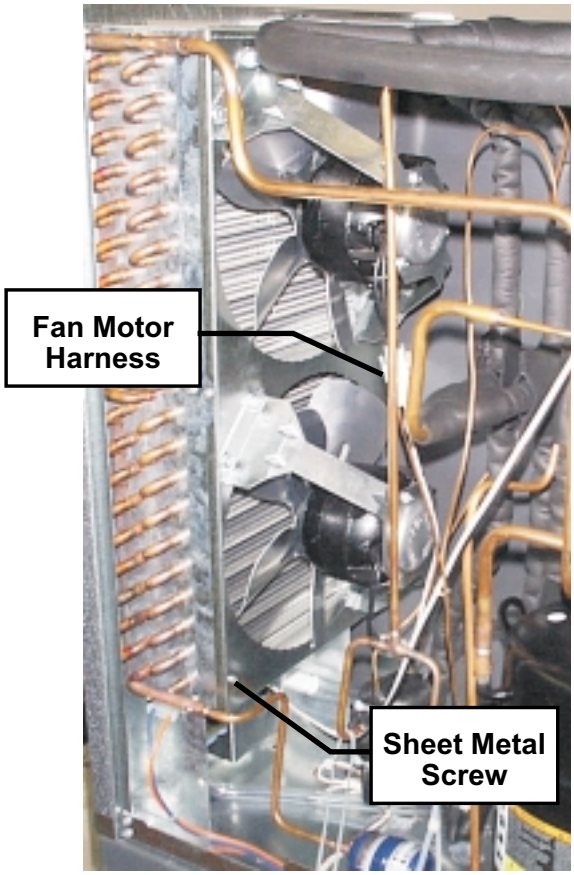

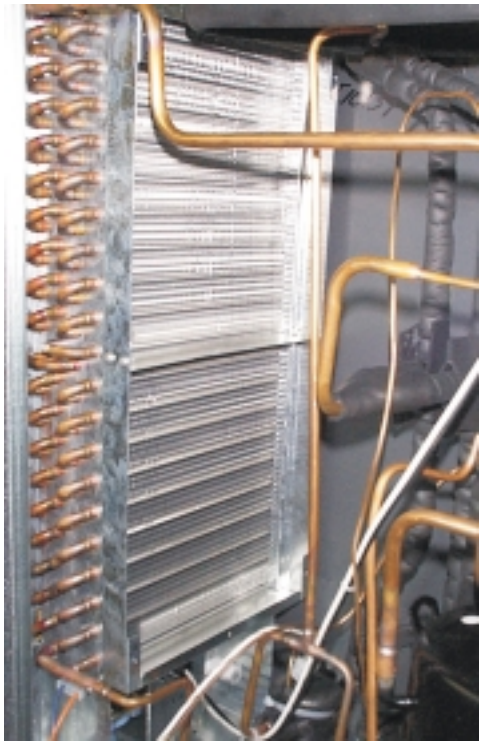

Service Diagnosis: Controller Diagnostic Light Analysis

Problem or Symptom	Possible Cause	Probable Correction
Machine is off	Bin is full, ice in cube port	Use some ice
	Bin full light on, no ice in cube port	Check optional thermostat, check for scale on ice sensor lens
	Power is off, check lights.	If all lights are out, check power supply, restore power if off
	Optional bin thermostat is closed	Check thermostat for ice on the bulb. If none, check adjustment.
	Transformer is open	If all lights are out and there is power, check transformer output for 24 vac
	Unit has been switched off Off lite is glowing	Push and release Freeze button to restart unit.
	Compressor will not start	Not enough water or water not sensed.
	Unit has Shut Down	Check for Refrigeration or Water Error
Unit is off & Water diagnostic light is ON or BLINKING	Water inlet valve malfunction	Check water diagnostic light, if it blinks 2 times and repeats, check the water inlet valve for proper water flow.**
	Water pump malfunction	Check that pump hose is attached and if pump is plugged in and working.
	Water level not sensed or not high enough	Check harness from sensor.
Unit is off & Refrigeration diagnostic light is ON or BLINKING	Low discharge or long freeze cycle	If the Refrigeration light is glowing steadily, there is a probable refrigeration problem
	Harvest problem	If the Refrigeration light blinks once and repeats, look for a harvest problem.** This also indicates that cubes were “sensed” by the bin controls.
		If the lite blinks 2 times and repeats, check for a harvest error - no cubes sensed.
	High Discharge Temp	If the refrigeration diagnostic light blinks 3 times and then repeats, check for a reason for high discharge temperatures.
	Unit does not go into harvest - exceeds maximum freeze time	Push and release Off button. Push and release Freeze button. Check operation.
		Push cube size float down and check operation.
	Exceeds maximum harvest time	Check for cause of long harvest cycle**
Unit runs and both Diagnostic lites are ON	Temperature sensors out of range	Replace the temperature sensor set (water and discharge).

* Machine may be reset by pushing and releasing the Off button, then pushing and releasing the Freeze button. ** See following pages

Service Diagnosis

Problem or Symptom	Possible Cause	Probable Correction
Unit is off because of a “Harvest Problem”	Ice sensors did not sense ice falling, unit stayed in harvest until the maximum harvest time ran out.	Check ice sensors. The bin full light should be off. If it is on or blinking the bin controls may be dirty. Clean if dirty. The board and bin controls may also need to be checked.
		Push and release Off button. Push and release Freeze button. Check machine operation. Check if ice is made and harvests.
	Ice sensors or Controller may have failed.	See “Unit does not shut off” below.
	Other components may have failed	Check the next page
Cubes are too large	Cube size control float is sticking.	Check/clean
	Inlet water valve leaks thru	Check water valve
Cubes are too small	Purge valve leaks thru	Check purge valve
	Not enough water	Check for leak in reservoir
Low ice capacity	Dirty condenser or filter	Replace filters, clean condenser
	Recirculation of air	Block air re-circulation or move condenser
	Low refrigerant charge	Check system. If there is a low charge, find the leak, recover the refrigerant, repair the leak, replace the dryer, evacuate and weigh in the nameplate charge.
	Too much water	Check for inlet water valve leak thru
Unit does not shut off or cannot sense ice falling	Ice sensor system may have failed.	Check ice sensors. Check bin full light, if off, place something between the electric eyes. The bin full light should begin to blink (after 20 seconds of continuous blockage it will glow steadily). If not, check operation of electric eyes by unplugging #4 and jumping out the two pins on the controller (first discharge any static electricity by touching the cabinet with the tool). If the bin full light blinks, replace the bin controls. If it does not blink, replace the controller. Note: Leaving #4 unplugged and jumped for 20 seconds will shut the machine down on a bin full (at the end of the harvest cycle). It will restart after 4 minutes or may be reset by pushing the Freeze button.

Service Diagnosis: Components

Problem or Symptom	Possible Cause	Probable Correction
Fan motor does not turn. Refrigeration light may be on steadily or blinks 3 times and repeats.	Open motor windings, or seized bearings	Replace fan motor
	No power to fan motor	Fan motor unplugged, check for voltage from controller. If none, replace controller.
Pump motor does not turn	Open motor windings, or seized bearings	Replace pump
	No power to pump	Check electrical connections. If the unit is in Freeze the pump should have power to it. If not, replace the AutoIQ Controller.
Hot Gas Valve does not open.	Open solenoid coil.	Replace hot gas valve
	Stuck valve	Replace hot gas valve
	No power to coil in Harvest	Check wire connections, if ok, replace AutoIQ Controller
Hot Gas Valve leaks thru (warm tube temperatures on both sides of valve during freeze)	Mechanical problem in valve	Replace valve
Water Inlet Valve does not open	Open solenoid coil	Replace valve
	Stuck valve	Replace valve
	No power to valve (early part of harvest)	Check wire connections, if ok, replace AutoIQ Controller
Water Inlet Valve does not flow enough water	Restriction in water supply	Check water filters and/or inlet screen.
Water Inlet Valve leaks thru	Mechanical problem in valve	Replace valve
Compressor does not work	Unit in Clean cycle	Push and release Freeze button.
	Contactor coil open	Replace contactor
	Open starting components	Check and replace
	Open windings	Check and replace compressor
	Internal valve failure	Replace compressor
	Water level too low or not sensed	Unit must be full of water before controller will start compressor. Check water level and sensor and harness.

Service Diagnosis: PTCR

The CME306 and CME456 use a PTCR (Positive Temperature Coefficient Resistor) in place of a conventional start relay and start capacitor.

- Power from the contactor connects to the PTCR and to the Run Capacitor.
- A wire connects the other terminal of the PTCR to the compressor's Start winding.
- Another wire connects the run capacitor to the start winding.
- A parallel circuit connects power from the contactor to the Run winding of the compressor.

A PTCR changes resistance sharply when its temperature changes. When the PTCR is cold, it connects full current to the compressor's start winding. After a very short time the PTCR heats up and shuts off the current flow. **Under normal operation, the PTCR's case is at about 180°F.**

At that temperature the PTCR has very high resistance and will not allow current flow. It must cool down to 120°F. before current will pass through it again.

Diagnosis:

1. Disconnect electrical power.

2. Check if the PTCR is cool enough to handle safely. If not, wait 5 minutes for it to cool off.

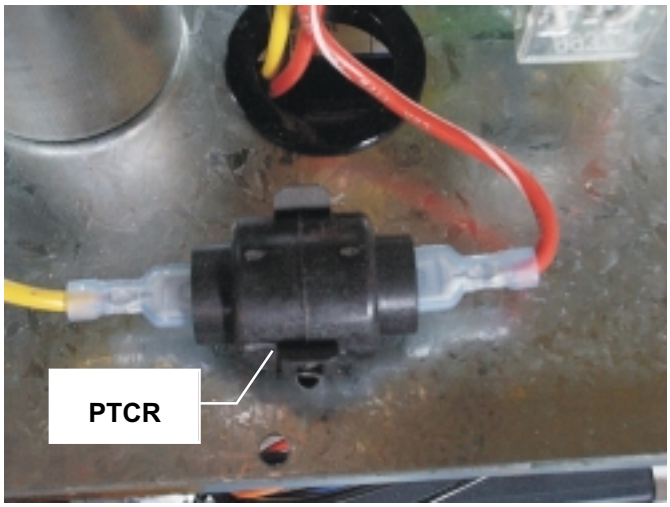

3. Disconnect both leads to the PTCR and measure its resistance with an ohmmeter. If the PTCR reads more than 50 ohms, replace it.

Operational Characteristics: **CME306**

Cycle Times (minutes):

Air Cooled	70°F. indoor air, 50°F. water	90°F. indoor air, 70°F. water
Freeze	11 - 12 minutes	14 - 15 minutes
Harvest	1 ¼ - 1 ½ minutes	1 minutes

Water Cooled	70°F. indoor air, 50°F. water	90°F. indoor air, 70°F. water
Freeze	11 - 12 minutes	12 - 13 minutes
Harvest	1 ½ minutes	1 ¼ minutes

System Pressures (PSIG):

Air Cooled	70°F. indoor air, 50°F. water	90°F. indoor air, 70°F. water
Suction: End of Freeze	26 PSIG	30 PSIG
Suction: Peak in Harvest	98 PSIG	119 PSIG
Discharge: 5 minutes into Freeze	203 PSIG	266 PSIG
Discharge: Minimum in Harvest	170 PSIG	200 PSIG

Water Cooled	70°F. indoor air, 50°F. water	90°F. indoor air, 70°F. water
Suction: End of Freeze	26 PSIG	27 PSIG
Suction: Peak in Harvest	84 PSIG	90 PSIG
Discharge:	245	245
Discharge: Minimum in Harvest	147	152

Refrigerant Charge, R-404A

- Air cooled: 23 ounces
- Water cooled: A series is 15 ounces, B series is 13 ounces

Typical Air Cooled Machine Amps

- 5 minutes into freeze: 10
- Harvest: 11

Typical Harvest Ice Weight

- 3 lb

Superheat (near the end of freeze)

- 5 to 15 degrees

Water Cooled:

- Discharge Pressure: 245 PSIG
- Hi Pressure Cuts Out at: 450 PSIG

Operational Characteristics: **CME456**

Cycle Times (minutes):

Air Cooled	70°F. indoor air, 50°F. water	90°F. indoor air, 70°F. water
Freeze	18 - 19 minutes	23 - 24 minutes
Harvest	1 ¾ minutes	1 ½ minutes

Water Cooled	70°F. indoor air, 50°F. water	90°F. indoor air, 70°F. water
Freeze	15 - 16 minutes	17 - 18 minutes
Harvest	3 ¼ minutes	2 minutes

System Pressures (PSIG):

Air Cooled	70°F. indoor air, 50°F. water	90°F. indoor air, 70°F. water
Suction: End of Freeze	32 PSIG	36 PSIG
Suction: Peak in Harvest	88 PSIG	100 PSIG
Discharge: 5 minutes into Freeze	236 PSIG	293 PSIG
Discharge: Minimum in Harvest	204 PSIG	224 PSIG

Water Cooled	70°F. indoor air, 50°F. water	90°F. indoor air, 70°F. water
Suction: End of Freeze	30 PSIG	31 PSIG
Suction: Peak in Harvest	76 PSIG	80 PSIG
Discharge:	245 PSIG	245 PSIG
Discharge: Minimum in Harvest	165	173

Refrigerant Charge, R-404A

- Air cooled: 24 ounces
- Water cooled: A series is 17 ounces, B series is 14 ounces

Typical Air Cooled Machine Amps

- 5 minutes into freeze: 13
- Harvest: 13.7

Typical Harvest Ice Weight

- 6 ½ - 7 lb

Superheat (near the end of freeze)

- 5 to 15 degrees

Water Cooled:

- Discharge Pressure: 245 PSIG
- Hi Pressure Cuts Out at: 450 PSIG

Removal and Replacement: Water Level Sensor

1. Remove front panel.

2. Push and hold the OFF button. Release it when the machine stops.

3. Unplug the wires from the sensor.

4. Remove one screw holding sump cover to sump.

5. Unwind wires from sump cover.

6. Lift the cover enough to remove the float from the stem.

7. Squeeze mounting tabs together to release sensor from cover.

8. Reverse to reassemble.

Purge Valve Timer

The purge valve timer is sensitive to electrostatic discharge. Be certain to touch a grounded surface before touching this component. Do the same when handling the replacement part.

1. Touch a grounded surface.

2. Remove front panel.

3. Disconnect electrical power.

4. Remove high voltage box cover.

5. Locate timer board at the bottom of the high voltage box.

6. Unplug all the wires to the board.

7. Compress each of the four stand-off posts to release the board from the stand-offs.

8. Remove the board from the unit.

Reverse to reassemble.

Water Temperature Sensor

Note: This sensor is replaced as a set with the Discharge Temperature Sensor.

1. Remove front panel.

2. Push and release Off button.

3. Remove 1 plastic bolt and the reservoir cover.

4. Locate water temperature sensor (inserted into pump discharge hose).

5. Pull out to remove.

6. Trace back to AutoIQ Controller, unplug from #5.

7. Remove the Discharge Line temperature sensor (see next).

8. Reverse to reassemble.

Discharge Line Temperature Sensor

1. Remove front panel, push and release the Off button.

2. Locate discharge line sensor. It is attached to the discharge line of the compressor, 6" from the compressor discharge port.

3. Unwrap the insulation and un-snap the clip holding the sensor to the discharge line.

4. Trace the sensor wires back to the controller, they are plugged into #5 with the water temperature sensor, and must be replaced with it.

5. Reverse to replace, be sure that the discharge line sensor is 6" up from the compressor discharge port. Be sure to re-wrap the insulation.

Note: Route wires so they do NOT contact the discharge line.

The sensor for the Discharge line is marked with a small piece of yellow tape. Do not reverse the sensors.

Removal and Replacement: Fan Blade and/or Fan Motor

1. Disconnect electrical power.

⚠WARNING

Electrical Shock Hazard

Disconnect Electrical Power Before Servicing

2. Remove front, top and left side panels.

3. Remove the fan and motor shroud assembly.

A. Remove the 6 sheet metal screws holding the assembly to the condenser.

B. Unplug the fan motor(s) from the wire harness.

C. Lower and tilt the assembly until it clears the refrigerant lines.

D. Lift it out of the machine.

4. Replace the blade or motor as needed.

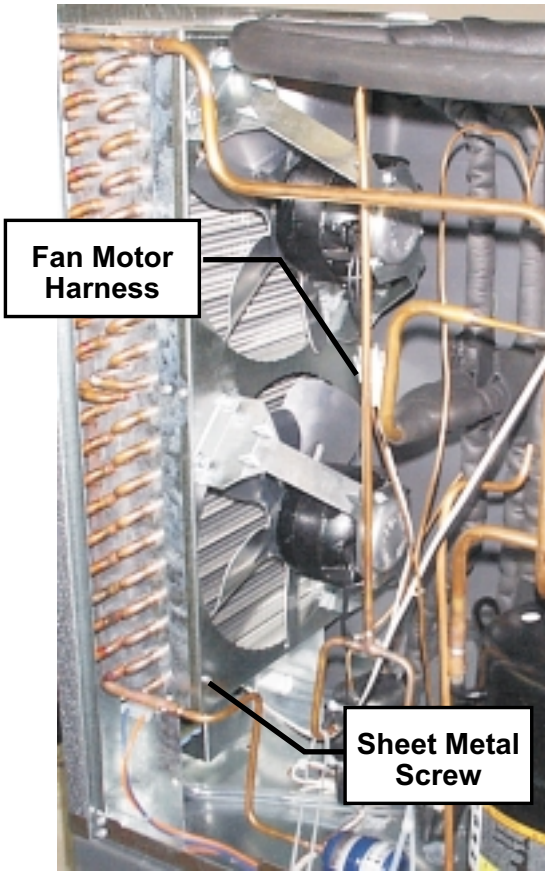

Refrigeration

To use the access valves:

1. Be sure that the valve is closed. Remove the stem cap and insert a 3/16" allen wrench. Check that the valve is closed.

2. Remove the port cap and attach refrigerant manifold hoses.

3. Open the valve and purge the hoses.

4. When service is complete, shut the discharge access valve first. Then, with the machine running and the middle hose outlet securely fastened to the manifold or refrigerant tank (closed) open both manifold valves. This allows any liquid refrigerant in the discharge hose to flow thru the manifold and into the suction side.

5. After the gages have equaled, shut the manifold valves and the suction access valve.

6. Remove the gages and replace the stem and port caps. Make certain that they are tightly closed.

Refrigeration System Components

Due to the expected level of training and experience of a refrigeration mechanic, detailed instructions regarding the replacement of refrigeration components will not be presented. However, critical items will be noted here.

Refrigerant:

1. This ice machine uses R-404A or HP62 as a refrigerant. It has several unique characteristics.

A. It must use polyol ester refrigerant oil, and that oil is very water absorbent. The system must not be open for more than 15 minutes.

B. An electronic leak detector capable of locating HFC-134a type refrigerant must be used to locate refrigerant leaks.

C. An HFC type liquid line dryer must be used.

D. A nitrogen purge is required when brazing.

E. When evacuating, use of an electronic micron gage is recommend. Evacuate to 300 microns.

F. It must be liquid charged:

1. Place a drum or cylinder of R-404A on the scale, liquid out side up (check container).

2. Attach the charging hose to the cylinder of R-404A. Open the cylinder's valve and purge the hose to the manifold.

3. Close the low side service access valve.

4. Open the discharge side manifold valve and weigh in the name plate charge. After the charge is weighed in, wait a moment & re-check the scale.

5. If all of the refrigerant charge has not been weighed into the discharge side, it must be carefully added thru the low side. Close the discharge service access valve.

6. With a sight glass or charge faster in the hose to the low side port, start the ice machine.

7. Open the low side service access valve.

8. Crack open the low side manifold valve and watch the scale and sight glass. Open and close the low side manifold valve to flow liquid into the manifold but flash off to vapor before it enters the refrigeration system.

9. After the scale = the correct charge, shut off the valve on the refrigerant cylinder.

10. With the ice machine running and the discharge access valve closed, open both manifold valves to allow the refrigerant in the hoses to enter the system.

11. Shut the suction service access valve.

12. Remove the refrigeration manifold gages.

13. Replace and tighten all caps.

Check the following:

1. Has the water supply to the ice machine or building been shut off? If yes, the ice machine will automatically restart within 25 minutes after water begins to flow to it.

2. Has power been shut off to the ice machine? If yes, the ice machine will automatically restart when power is restored.

3. Has someone shut the water off to a water cooled unit?. If yes, the ice machine may need to be manually reset.

4. Does the bin control have ice on it? If so, remove the ice and the machine should start in a few minutes.

To Manually Reset the machine.

1. Remove the front panel.

2. Locate the AutoIQ Controller. If a red diagnostic light is glowing, note which one and its blink rate. Then push and release the off button.

3. Push and release the Freeze button.

4. The machine should begin to operate. If there is a lack of water it will soon shut off again.

5. Return the front panel to its normal position.

If the machine shuts down again, call for service.

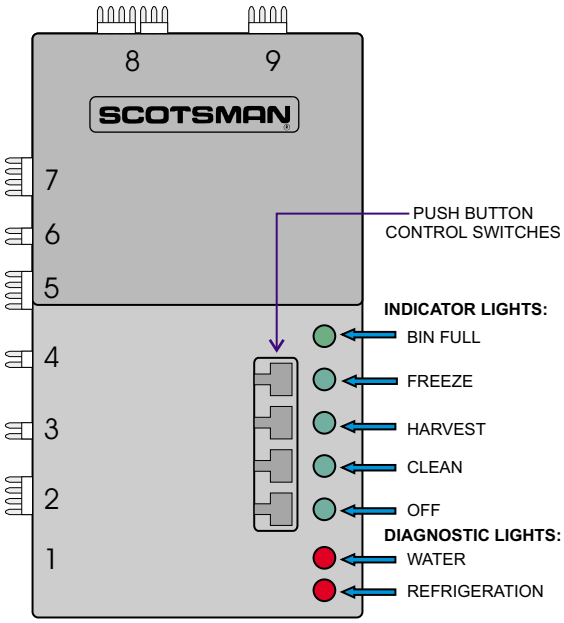

To Shut the Machine Off:

1. Remove the front panel.

2. Locate the AutoIQ Controller.

3. Push and hold the Off button for 3 seconds or until the machine stops.

Scotsman®

Bulletin Number: **PS - 4 - 2002**
Bulletin Date: **February 2002**

SERVICE BULLETIN

Subject: New Ice Sensors in CME1356, CME1656 and CME2006. New Ice Sensors, new Water Level Sensors and new Controllers in CME306 and CME456.

Ice Sensors: Scotsman has begun production of ice machines equipped with a new style of ice sensor. The new sensor is interchangeable with the prior sensors, which are still in use on other Scotsman modular cubers.

Controllers: Scotsman has also added the new blue controller (see PS-3-2002) to models CME306 and CME456.

Water Level Sensor: A new water level sensor is also being used on CME306 and CME456.

Service parts for the ice sensors and water level sensor have not changed.

Ice machines built prior to this change are not affected.

The new sensors' use will be phased in by model throughout 2002.

Additional information is on the back of this bulletin.

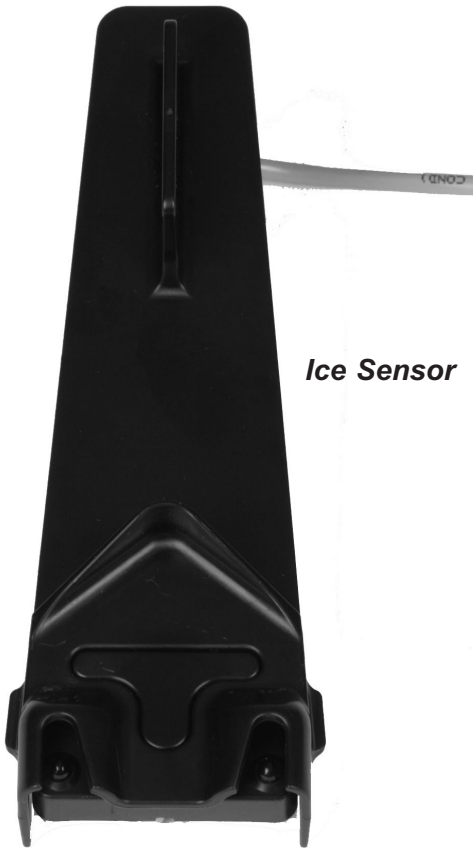

Ice Sensor

Photo-Eyes in New Ice Sensor

Push to Release Photo-Eye Module

The new ice sensor's have a photo-eye module that can be separated from the holder.

Once separated, the lenses of the photo-eyes can easily be cleaned with a soft cloth or cotton swab. Ice machine cleaner may be used if needed.

Like the other style of sensor, the photo-eye part can be placed in the reservoir when the ice machine is being cleaned with ice machine cleaner.

When re-assembling, be sure that the wire is not sticking out past the edges of the sensor holder.

Photo-Eye Module Separated from Holder

Route Wire Under Clip, Push Module Into Place